University of Massachusetts - Amherst
ScholarWorks@UMass Amherst

Wind Energy Center Reports | UMass Wind Energy Center

1978

A Continuation Of The Investigation of the Feasibility of Using Windpower for Space Heating in Colder Climates

Duane E. Cromack

Follow this and additional works at: http://scholarworks.umass.edu/windenergy_report

Part of the Mechanical Engineering Commons

Cromack, Duane E., "A Continuation Of The Investigation of the Feasibility of Using Windpower for Space Heating in Colder Climates" (1978). *Wind Energy Center Reports.* Paper 2.
http://scholarworks.umass.edu/windenergy_report/2

This Article is brought to you for free and open access by the UMass Wind Energy Center at ScholarWorks@UMass Amherst. It has been accepted for inclusion in Wind Energy Center Reports by an authorized administrator of ScholarWorks@UMass Amherst. For more information, please contact scholarworks@library.umass.edu.

UC-60

UM-WF-PR-78-3

"A CONTINUATION OF THE INVESTIGATION OF THE FEASIBILITY OF USING WINDPOWER FOR SPACE HEATING IN COLDER CLIMATES"

Progress Report for Period Ending

March 31, 1978

Duane E. Cromack

Principal Investigator

April 10, 1978

Energy Alternatives Program

School of Engineering

University of Massachusetts

Amherst, Massachusetts 01003

AS PART OF THE FEDERAL WIND ENERGY

PROGRAM ADMINISTERED BY THE DEPARTMENT

OF ENERGY

Any opinions, findings, conclusions, or recommendations expressed in this publication are those of the author(s) and do not necessarily reflect the views of the Department of Energy.

TABLE OF CONTENTS

		Page
	Title Page	i
	Table of Contents	ii
1.	Budget Summary	iii
2.	Summary of Progress	1

DOE CONTACT 5-20664 CROMACK

MONTHLY PRINTOUT BALANCES

	BEGINNING BALANCE	10/29	11/25	12/31	1/31	2/28
SALARIES	$70,325.00	57,504.27	47,417.59	47,314.58	47,308.92	47,241.28
SERVICES-RA's	--	31,955.03-	32,892.92-	35,177.62-	36,916.78-	37,845.88-
TRAVEL	2,400.00	1,379.16	906.37	1,091.76	1,091.76	1,091.76
ADVER. & PRINTING	2,000.00	2,000.00	2,000.00	2,000.00	2,000.00	2,000.00
MAINT.	--	135.00-	135.00-	135.00-	1,635.00-	1,635.00-
SUPPLIES	13,900.00	11,894.58	11,662.58	9,762.79	9,261.96	8,079.52
TELEPHONE	1,100.00	998.32	998.32	398.32	398.92	98.32
EQUIPMENT	25,620.00	17,387.00	13,537.55	13,060.23	13,200.82	11,189.82
RENTALS	5,500.00	4,921.55	4,921.55	3,901.55	3,901.55	3,901.55
OVERHEAD	45,711.00	26,850.27	23,677.70	20,100.28	17,548.33	14,954.45
	166,556.00	90,845.12	72,093.74	62,316.89	56,159.88	49,075.82
TOTAL DIRECT COST BAL. AVAILABLE	120,845.00	63,994.85	48,416.04	42,216.61	38,611.55	34,121.37

DOE CONTRACT 5-20664

MONTHLY PRINTOUT BALANCES

	BEGINNING BALANCES	04/01/78	
SALARIES	$ 70,325.00	46,967.57	
SERVICES-RA's	--	37,192.67-	
TRAVEL	2,400.00	1,091.76	
ADVER. & PRINTING	2,000.00	2,000.00	
MAINT.	--	1,623.58-	
SUPPLIES	13,900.00	7,673.54	
TELEPHONE	1,100.00	79.32	
EQUIPMENT	25,620.00	9,916.65	
RENTALS	5,500.00	2,901.55	
OVERHEAD	45,711.00	11,775.53	
TOTAL DIRECT COST BAL. AVAILABLE	120,845.00	31,814.04	

2. SUMMARY OF PROGRESS

This report covers the contract period of March 1 to March 30, 1978. Good winds have been available during most of March and considerable data has been collected and is currently being reduced on the operation of the wind turbine. The machine has been observed operating throughout all control regions including constant rpm region 3 and automatic feather operation.

TASK 1 Continued Operation of SH-1 Operation

As of this report date, a 6 mil pvc liner has been installed in the tank over the previously installed 30 mil liner that developed a leak. The new liner has no seams and appears not to leak with the cold water. The next condition is to observe it at elevated temperatures.

Data on the performance of the domestic-hot-water pre-heater system is now being taken.

TASK 2 Continued Aerodynamics and Blade Studies

A shaker assembly, consisting of a lightweight variable speed dc motor with an eccentric mass attached to the shaft, has been mounted on the spare blade to determine the natural frequencies of the blade. The motor is mounted directly on the blade at the 35% of the radius. The first three flapping modes and the first two edgewise modes have been observed. An attempt is now being made to get pictures of these modes and to analyze the frequencies.

Initial static strain tests have been conducted and the strains measured. Large errors are apparent and methods of evaluating and reducing these errors are now being worked on before conducting further tests.

STRAIN GAGE ARRANGEMENT

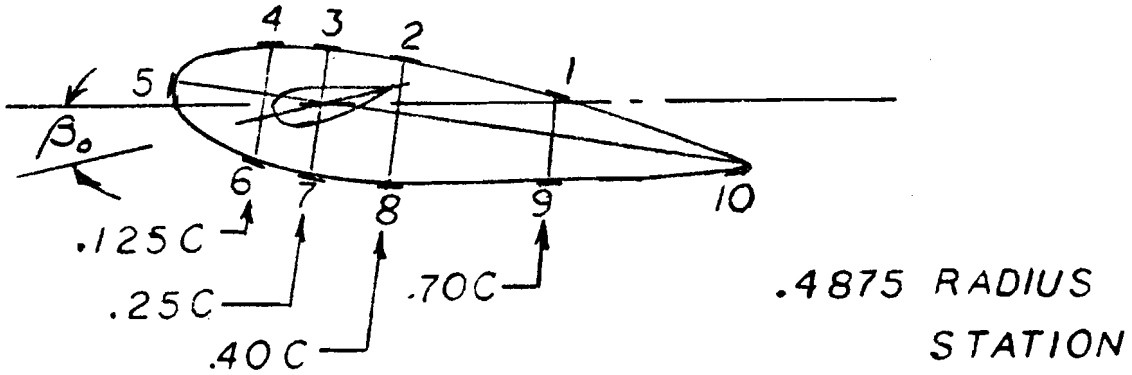

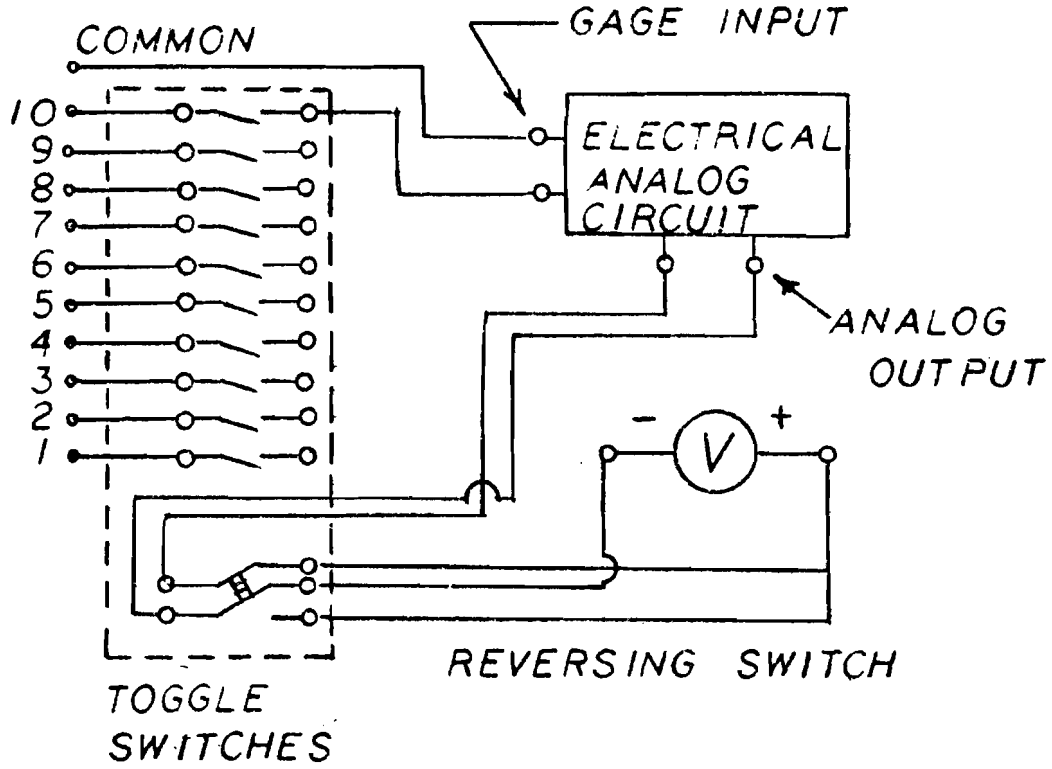

FIGURE 1

TABLE I

WF-1 Laboratory Test Blade

Fiberglass-Epoxy Resin / D-Spar
Aerodynamically Optimum Taper
And Twist

Preliminary Laboratory Blade (Instrumented As Shown, Pg. 12)

Data 1

Gage Locations / r/R = .4875 (48.75% radius station)

Load / 38 lbs. 9.5 oz. @ .9 R (90% radius)

$\beta_o = -1°$

Gage No.	1	2	3	4	5	6	7	8	9	10	
Voltage I	+4.6 V	+6.7	+7.4	+6.7	+2.0	-8.6	-9.8	-10.0	-6.2	-0.3	±.05
(Trials) II	4.4	6.8	7.5	6.8	2.0	8.7	9.8	10.0	6.0	0.2	!
III	4.4	6.8	7.5	6.7	2.0	8.5	9.9	9.8	6.1	0.2	
Calibration Factor (from graph)	-.16 ±.01	-.15 ±.01	-.14 ±.01	-.15 ±.01	-.19 ±.015	-.14 ±.01	-.13 ±.005	-.13 ±.005	-.15 ±.01	-.52 ±.09	
Computed Strain μin/in	268.1 T ±23	380.8 T ±33	392.3 T ±36	378.9 T ±33	142.5 T ±17	451.7 C ±41	479.6 C ±27	484.4 C ±27	343.3 C ±30	45.5 C ±20	

Test Date: 3/23/78

Operator(s): F.P., C.T.

Comments: First Data Taken Before Toggle Switch Bank Was Installed.

T = Tensile Strain

C = Compressive Strain

TABLE 2

DATA 2

GAGE LOCATIONS / 48.78% radius

LOAD / * @ *

f_o = *

Gage No.	1	2	3	4	5	6	7	8	9	10
Voltage I	†	-7.1	-7.7	-6.7	-2.0	-7.0	-8.8	-9.85	-5.8	-0.1↔.3* ±.05
(Toggle) II	†	7.1	7.6	6.9	2.0	6.85	8.55	9.8	5.7	0.15
III	†	7.15	7.65	6.85	2.0	6.6	8.7	9.7	5.65	0.2
k (from graph)		-.14 ±.01	-.14 ±.01	-.15 ±.01	-.19 ±.015	-.15 ±.01	-.14 ±.01	-.13 ±.005	-.15 ±.01	-.56 ±.10
Computed Strain		373.8 T ±34	401.8 T ±36	383.6 T ±33	142.5 T ±17	385.5 C ±33	457.8 C ±41	477.1 C ±27	321.7 C ±28	38.5 C ±20

TEST DATE: 3/29/78

OPERATOR(S): C. & D. T.

COMMENTS: * DATA 2 IS IDENTICAL TO DATA 1 BUT WAS TAKEN AFTER TOGGLE SWITCH BANK WAS INCORPORATED.

† TOGGLE SWITCH NO. 1 WAS DEFECTIVE FOR STRAIN GAGE PURPOSES.

* READINGS DIFFICULT AT LOW END OF SCALE DUE TO FIELD DRIFT.

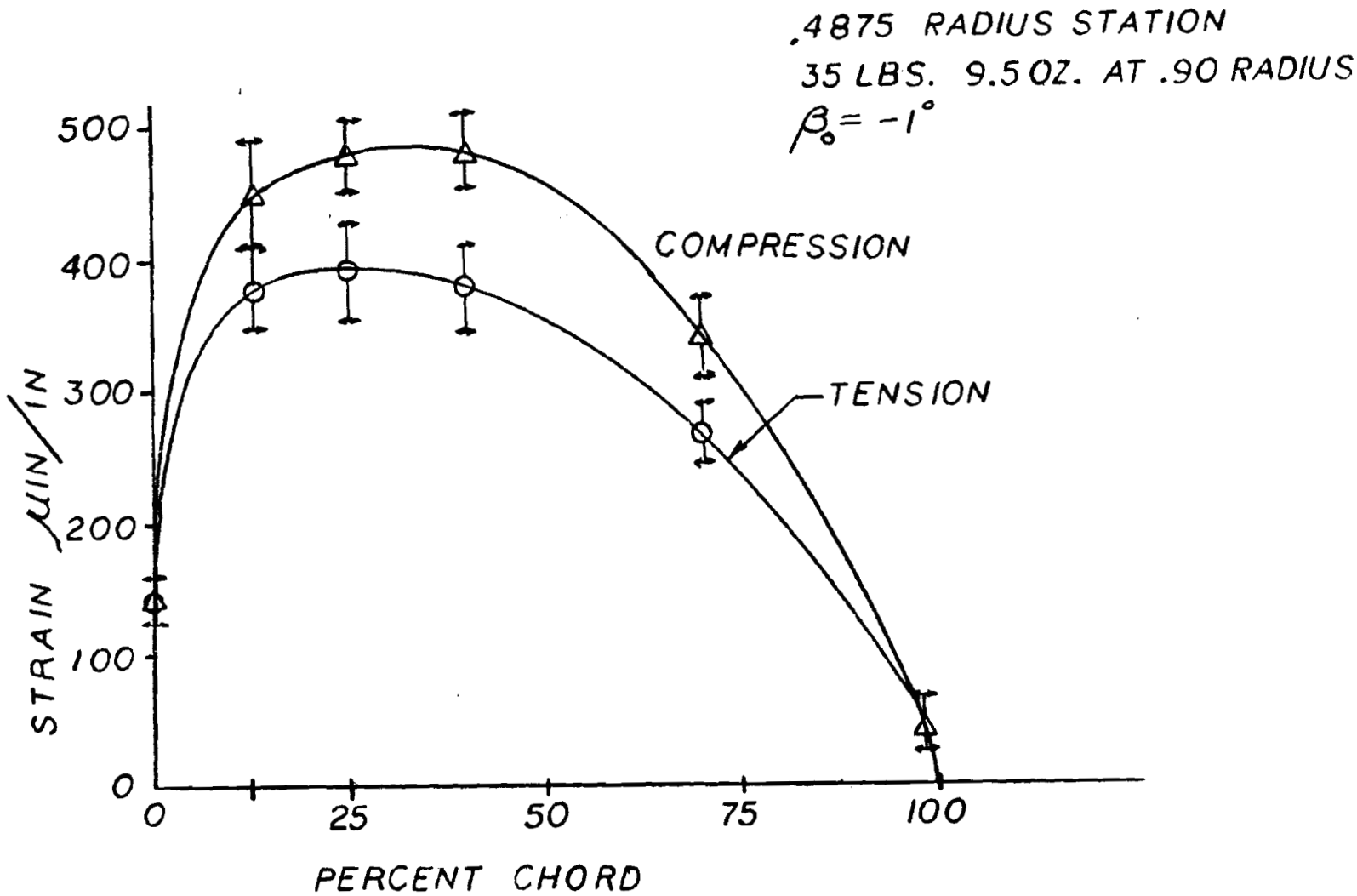

FIGURE 2

SURFACE STRAIN WF-1 BLADE

Figure 1 shows the strain gage arrangement around the blade section at the .4875 radius station and a schematic of the circuitry. Tables 1 and 2 show two sets of data taken for a point load of 35 lbs 9.5 oz applied at the .9 radius station. Figure 2 is a plot of strain (micro-inches/inch) as a function of percent of chord. Large error bands are also indicated.

TASK 4 - Near Field Wind Measurements

Wind profile data are being reported for selected tests made at U.Mass Solar Habitat I during March 1978.

Figure 1 is a plot of wind speed versus the logarithm of height. The data were obtained from four R.M. Young propeller type anemometers mounted at vertical locations of 5.75, 11,5, 17.25 and 23 meters above the ground plane. The anemometers were mounted on tower number 2 which is located at a distance of five blade radii upstream of the wind turbine as shown on the attached site plan. Test dates and other information relative to these data are given in Table 1. As can be seen on Figure 1 most of the profiles can be fit to a straight line on the semi-log plot. Using the standard log-linear profile equation for the mean wind speed u

$$\frac{u}{u^*} = \frac{1}{k} \ln \frac{z}{z_0}$$

where

$k = 0.4$, von Karman's constant

$u^* = \sqrt{\tau_0/\rho}$, frictional velocity

the data from profiles 4, 5, and 7 were fit to this equation. The result was a value of $u^* = 0.336$ m/s which is in reasonable agreement with values reported in the literature (Sutton, Micrometeorology).

Profile		Direction	Direction	WT Feathered
1	3/8/78	1 hr.	South	No
2	3/7/78	2 hr.	NW	No
3	3/7/78	2 hr.	NW	Yes
4	3/6/78	2 hr.	NW	No
5	3.4/78	2 hr.	NW	No
6	3/19/78	15 min.	NW	No
7	3/19/78	1 hr.	NW	No

TABLE 1 Conditions for Wind Profile Data

The importance of these data for wind turbine operation is that they indicate the shear in the wind profile approaching the blade disc. The maximum wind speed difference between the maximum and minimum blade heights appears to be 0.45 m/s. The lower wind speed profiles 1 and 2 indicate a lower shear of approximately 0.2 m/s.

Figure 2 is a wind speed histogram from one of the anemometers at the 23 meter height. The time duration was only 2 hours for this histogram. It would be difficult to fit an analytical profile to this histogram. It is believed that windspeed averages over more time are necessary to produce a smooth curve amenable to analytical description. Future histograms will be obtained for longer durations.

At the present time the anemometers have been removed from tower 2 and one anemometer is being installed on each of the five towers on the site plan.

There are no specifics on other tasks for this report. However, the renewal proposal has been submitted and each task director has been asked to prepare a time schedule for the remainder of the contract period. These schedules will be in the next progress report and should indicate the details for the completion of each task.

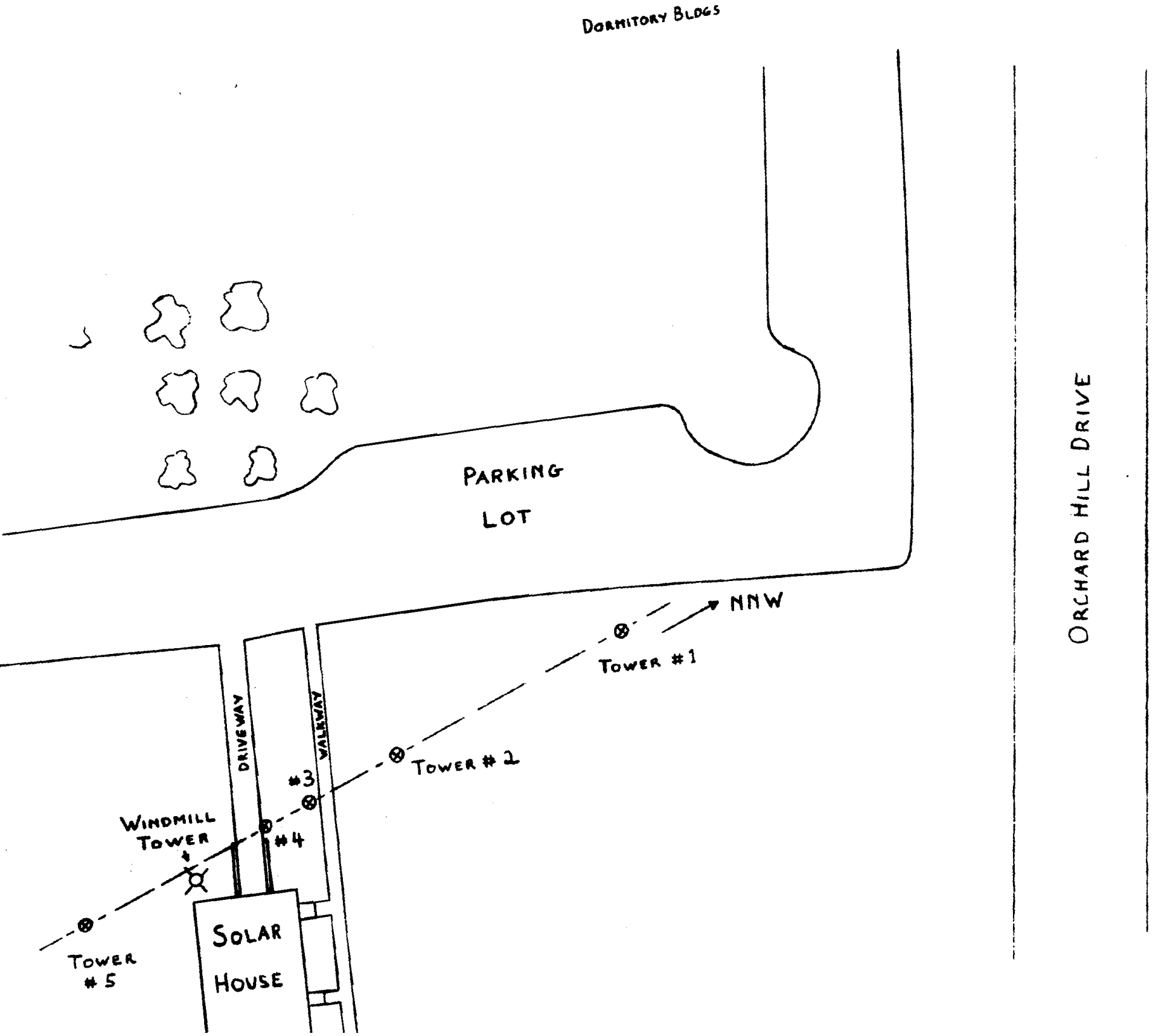
DORMITORY BLDGS
PARKING
LOT
ORCHARD HILL DRIVE
NNW
TOWER #1
TOWER #2
#3
#4
DRIVEWAY
WALKWAY
WINDMILL
TOWER
TOWER
#5
SOLAR
HOUSE

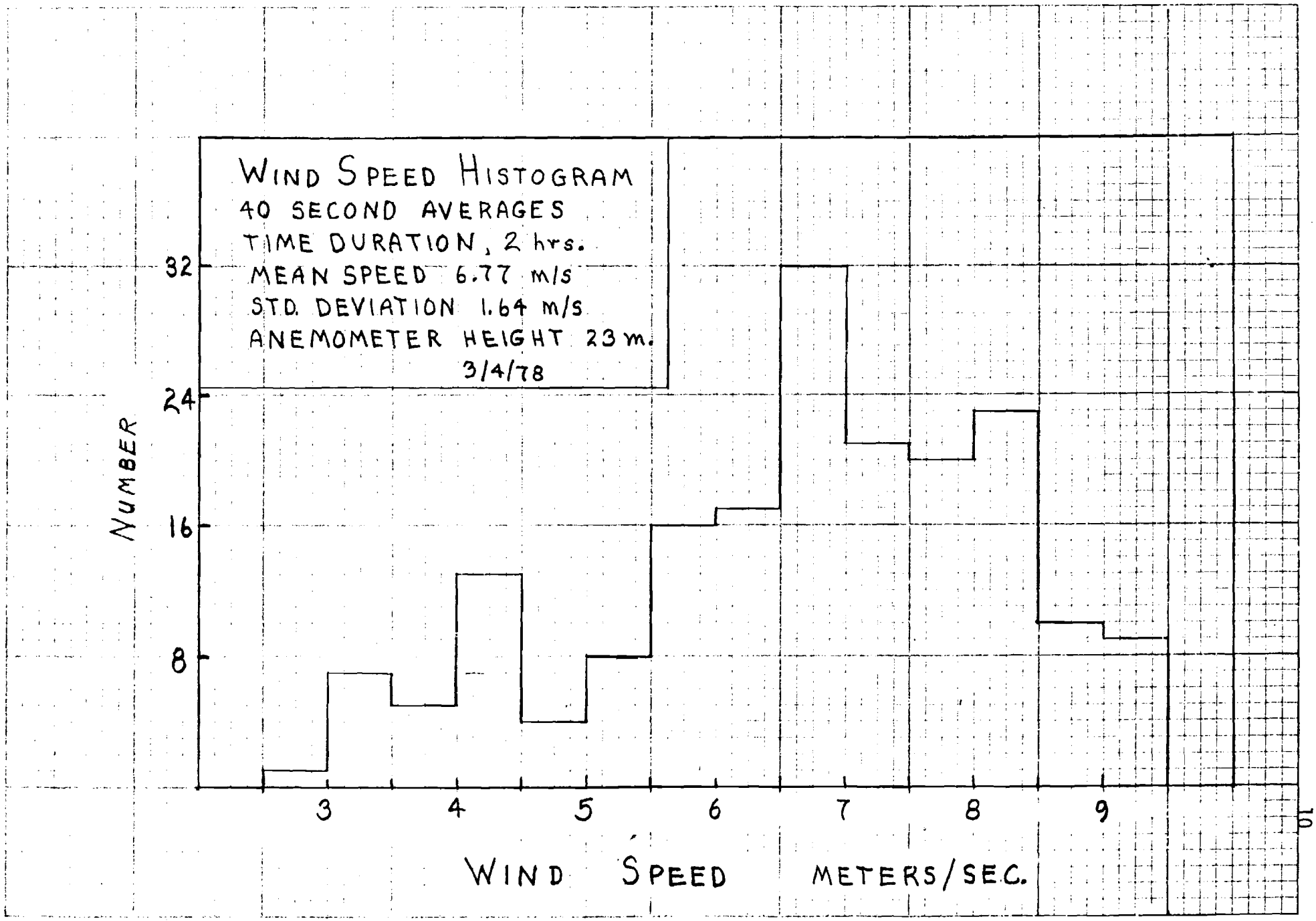
WIND SPEED HISTOGRAM
40 SECOND AVERAGES
TIME DURATION, 2 hrs.
MEAN SPEED 6.77 m/s
STD. DEVIATION 1.64 m/s
ANEMOMETER HEIGHT 23 m.
3/4/78
NUMBER
32
24
16
8
3
4
5
6
7
8
9
WIND SPEED METERS/SEC.

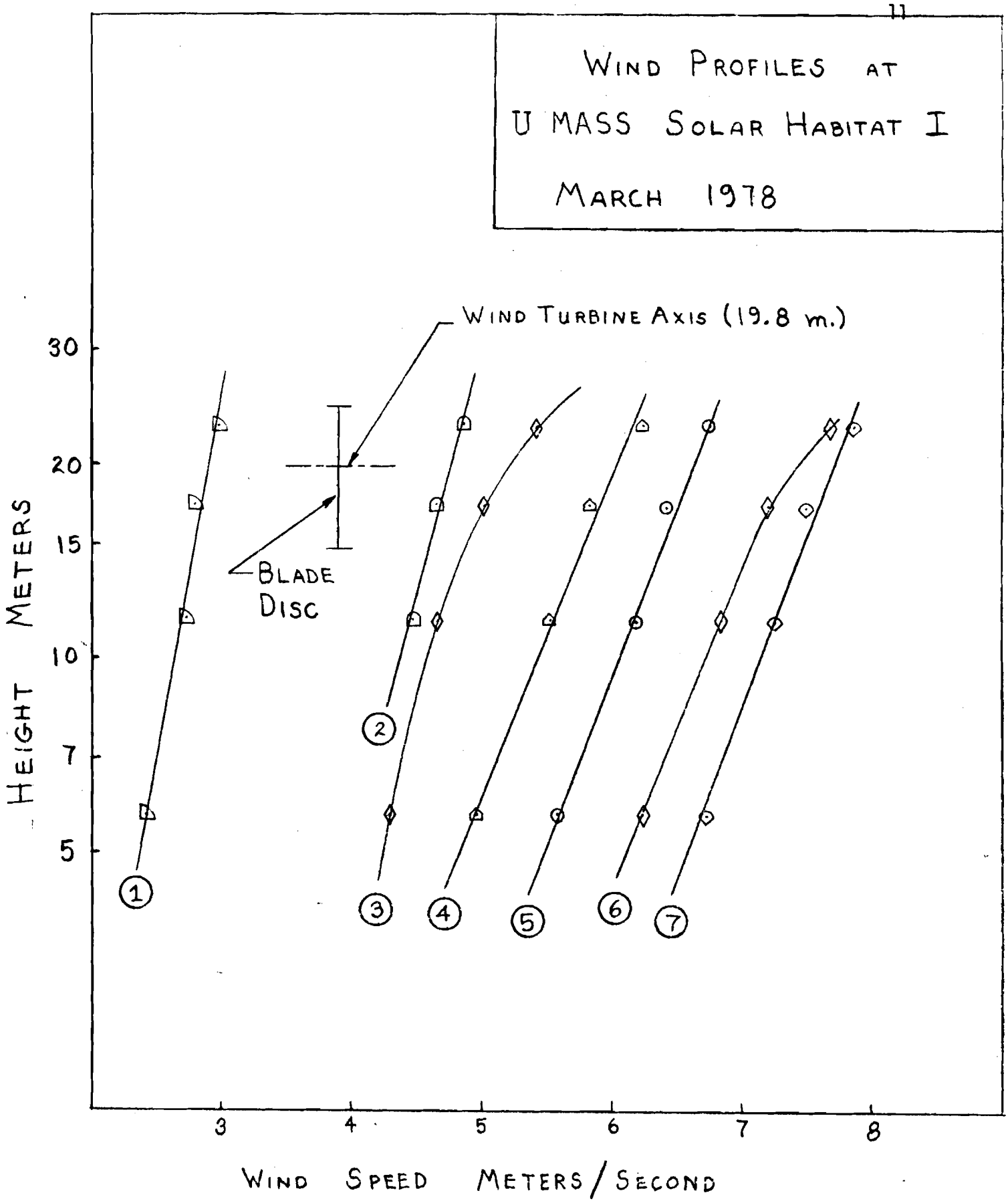
WIND PROFILES AT
U MASS SOLAR HABITAT I
MARCH 1978
WIND TURBINE AXIS (19.8 m.)
BLADE DISC
HEIGHT METERS
30
20
15
10
7
5
1
2
3
4
5
6
7
3
4
5
6
7
8
WIND SPEED METERS/SECOND