University of Massachusetts - Amherst
ScholarWorks@UMass Amherst

Wind Energy Center Reports | UMass Wind Energy Center

1979

Design And Evaluation Of The Umass WF-1 Kilowatt Hour Meter

Michael George Edds

Duane Cromack

Follow this and additional works at: http://scholarworks.umass.edu/windenergy_report

Part of the Mechanical Engineering Commons

Edds, Michael George and Cromack, Duane, "Design And Evaluation Of The Umass WF-1 Kilowatt Hour Meter" (1979). *Wind Energy Center Reports.* Paper 6.
http://scholarworks.umass.edu/windenergy_report/6

This Article is brought to you for free and open access by the UMass Wind Energy Center at ScholarWorks@UMass Amherst. It has been accepted for inclusion in Wind Energy Center Reports by an authorized administrator of ScholarWorks@UMass Amherst. For more information, please contact scholarworks@library.umass.edu.

PC67025F
UC-60
UM-WF-TR-79-3

DESIGN AND EVALUATION OF THE UMASS WF-1 KILOWATT HOUR METER

Technical Report

by

M. Edds and D. Cromack

Energy Alternatives Program
University of Massachusetts
Amherst, Massachusetts 01003

July 1979

Prepared for
Rockwell International Corporation
Energy Systems Group
Rocky Flats Plant
Wind Systems Program
P.O. Box 464
Golden, CO 80401

As a part of the
U.S. DEPARTMENT OF ENERGY
DIVISION OF DISTRIBUTED SOLAR TECHNOLOGY
FEDERAL WIND ENERGY PROGRAM

DISCLAIMER

This report was prepared as an account of work sponsored by the United States government. Niether the United States nor the United States Department of Energy, nor any of their employees, makes any warranty, express or implied, or assumes any legal liability or responsibility for the accuracy, completeness, or usefulness of any information, apparatus, product, or process disclosed, or represents that its use would not infringe privately owned rights. Reference herein to any specific commercial product, process or service by trade name, mark, manufacturer, or otherwise, does not necessarily constitute or imply its endorsement, recommendation, or favoring by the United States government or any agency thereof. The views and opinions of authors expressed herein do not necessarily state or reflect those of the United States Government or any agency thereof.

PATENT STATUS

This technical report is being transmitted in advance of DOE patent clearance and no further dissemination or publication shall be made of the report without prior approval of the DOE Patent Counsel.

TECHNICAL STATUS

This technical report is being transmitted in advance of DOE review and no further dissemination or publication shall be made of the report without prior approval of the DOE Project/Program Manager.

ABSTRACT

A kilowatt-hour meter was designed, built and evaluated for use with the UMass Wind Furnace. A meter, capable of measuring the variable frequency variable voltage output of the wind turbine, was needed. This report describes this somewhat unique instrument, including its design and calibration.

TABLE OF CONTENTS

	ABSTRACT	iii
1.0	INTRODUCTION	1
2.0	DESIGN OF METER	2
	2.1 General Design	2
	2.2 Detailed Design	2
3.0	CALIBRATION	8
4.0	EVALUATION	18
5.0	ACKNOWLEDGEMENT	21
6.0	APPENDIX	22

1.0 INTRODUCTION

Watt-hour meters have long been available to measure energy, as a product of current and voltage at a fixed frequency and over a period of time. Not available, however, are meters capable of handling currents and voltages that fluctuate over a wide range of frequencies.

The UMass Wind Furnace produces such fluctuating power. Since the electrical load is purely resistive, the AC power is used as generated. The wind turbine rotor is designed to operate at a constant tip-speed-ratio from cut-in to rated, hence runs at a continually varying rpm. Throughout this region of operation then, the generator rpm varies from about 400 at cut-in to 1800 at rated and the power generated varies in frequency accordingly reaching 60 Hz at the 1800 rpm. Hence, the need for a new meter designed to accommodate this variable frequency.

This report describes the design and evaluation of the UMass WF-1 kilowatt hour meter.

2.0 DESIGN OF METER

2.1 General Design

The UMass kW-hr meter functions by taking two analog dc voltages, representing the generator output voltage and current, and multiplies these instantaneous values together to obtain power (Fig. 2.1). The resulting power is represented by a new dc-voltage level which is converted to a variable-frequency pulse train. Through a simple algebraic expression, it can be shown that the energy produced is represented by a specified number of pulses. Therefore, by simply counting the pulses, the energy produced by Wind Furnace-I at a varying frequency, can be determined.

2.2 Detailed Design

The voltage-to-frequency conversion in the UMass Wind Furnace kilowatt-hour meter is the final stage in determining the energy production. All circuits prior to this conversion are analog in nature while all circuits beyond are digital (Fig. 2.1). Details of the circuitry from the generator to the output of the analog multiplier are shown in Fig. 2.2.

In the analog section, gains are adjusted to give the desired output voltage levels. These levels are determined primarily by the device specifications, i.e. the RMS-to-dc converter has a specified input and output voltage range of 5 volts in and 5 volts out. These circuits have been designed and adjusted to cover the full current and voltage range expected to be produced by the ac-generator including a margin of safety. The maximums designed for are 35 amps at 400 volts resulting in, for all 3-phases, $3 \times 35 \times 400 = 42$ kW.

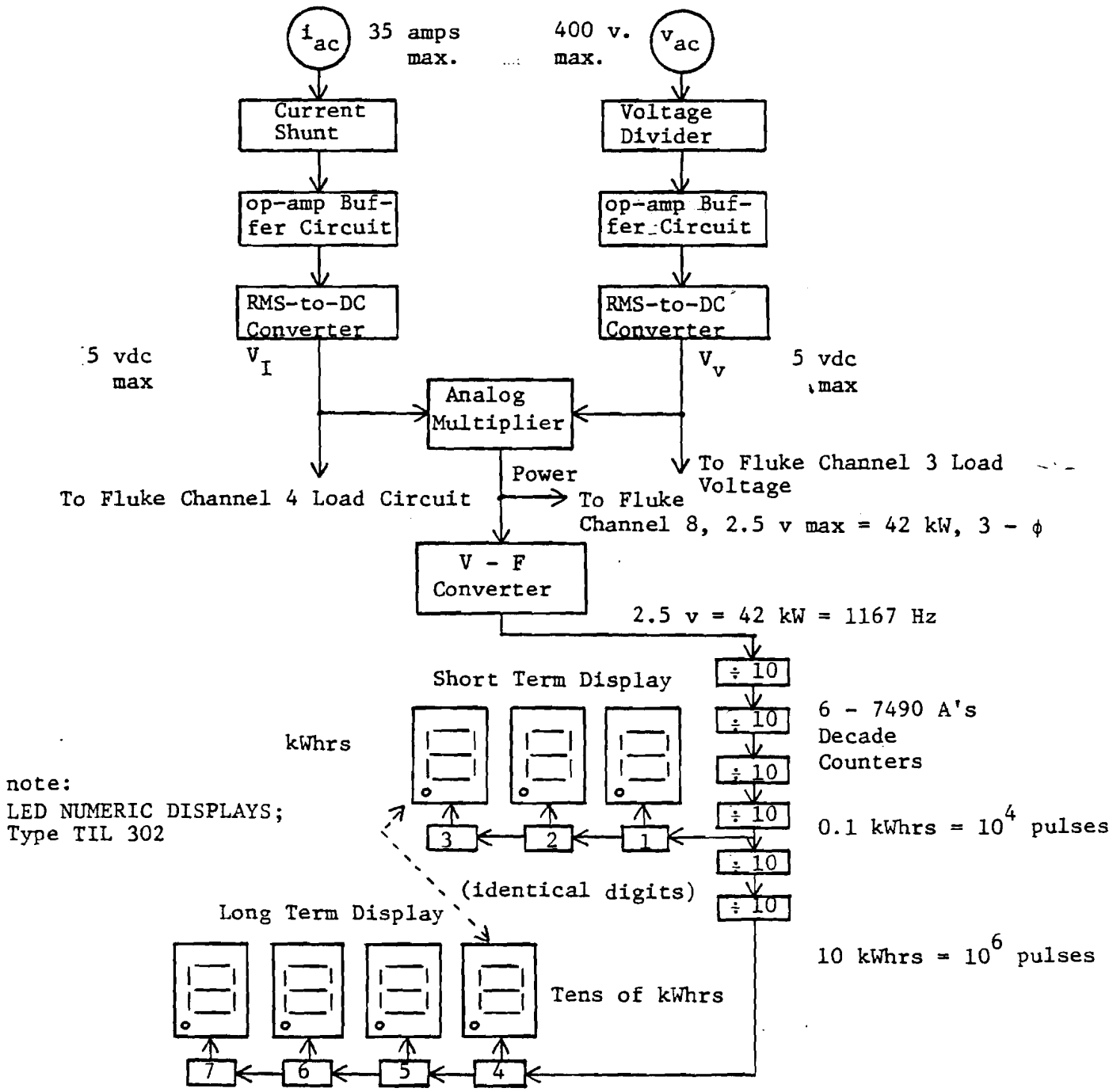

7 - 74143's

4-bit Counters/Latches/Decoders/Drivers

FIGURE 2.1
BLOCK DIAGRAM OF UMASS WF-1
KILOWATT-HOUR METER

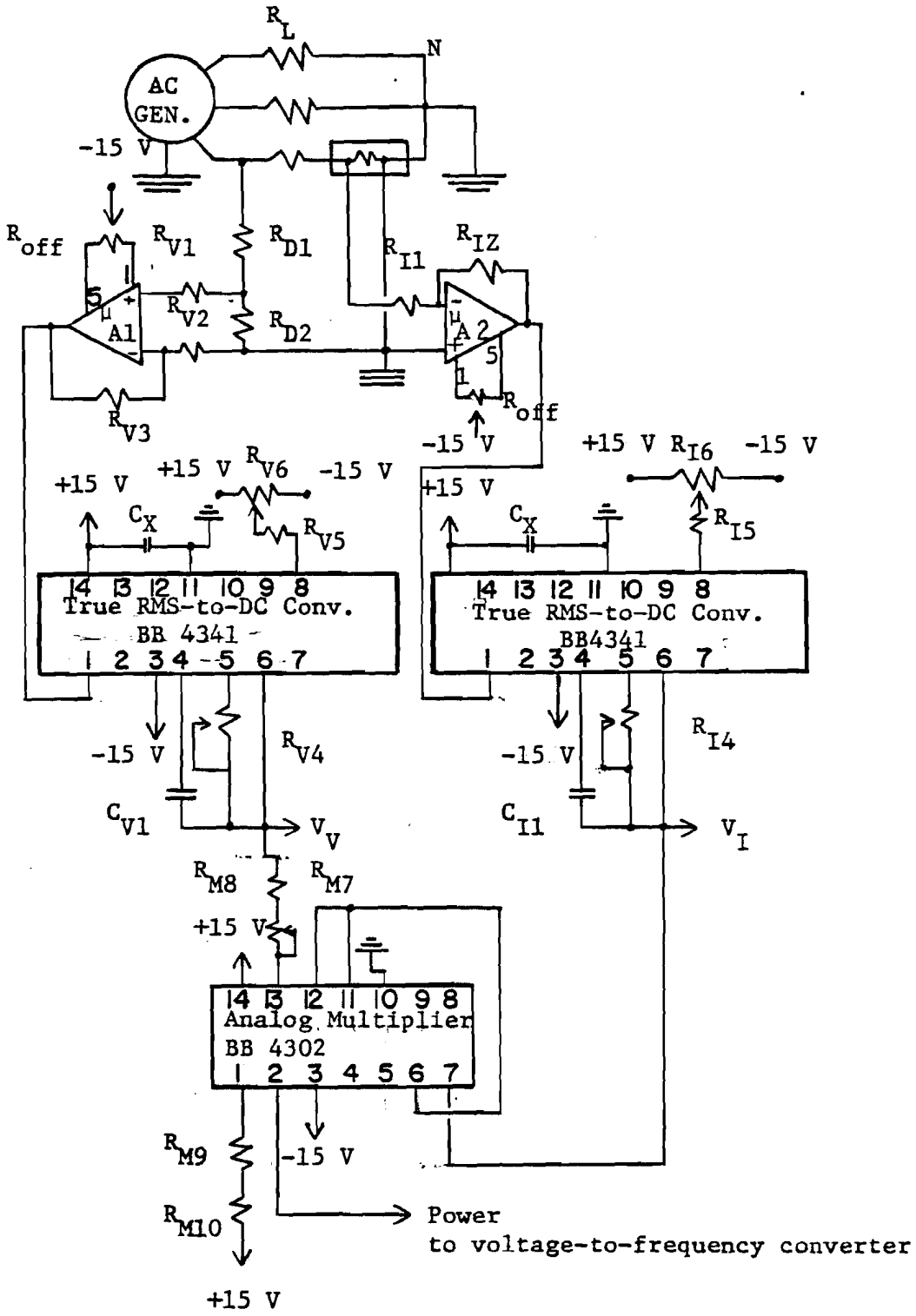

FIGURE 2.2
ANALOG CIRCUITRY
GENERATOR TO VOLTAGE-TO-FREQUENCY
CONVERTER

At the voltage-to-frequency (V-F) converter, the voltage representing the instantaneous power is converted to a frequency. The maximum frequency produced is determined by external components such as resistors and capacitors. Fig. 2.3 shows the components and circuitry for the voltage-to-frequency section of the kilowatt-hour meter.

These components have been sized to give a frequency of 1167 Hz at an input voltage (from the analog multiplier) of 2.5 volts-d.c. This results in the following expression:

$$2.5 \text{ V-dc} = 42 \text{ kW} = 1167 \text{ Hz}$$

Thus

$$42 \text{ kW} = 1167 \text{ pulses/sec}$$

or

$$42 \text{ kW-sec} = 1167 \text{ pulses}$$

$$\frac{42 \text{ kW-sec}}{3600 \text{ sec/hr}} = 1167 \text{ pulses}$$

Therefore,

$$1 \text{ kW-hr} = \frac{1167 \times 3600}{42} \text{ pulses}$$

or

$$1 \text{ kW-hr} = 1 \times 10^5 \text{ pulses}$$

From this relationship:

$$0.1 \text{ kW-hr} = 10^4 \text{ pulses}$$

$$10 \text{ kW-hr} = 10^6 \text{ pulses}$$

By using decade counters at the output of the V-F counter, the frequency is divided down with four counters resulting in a division by 10^4 and six counters, a division by 10^6. The divided signal is then fed to the display drivers as shown in Fig. 2.4. These drivers will pulse the display, thereby increasing the display by 1-digit each time they are pulsed. Two displays have been used, a short term and a long term, thus permitting the short term display to be reset without affecting the long term total kilowatt-hour reading.

R_1	10.5 K ± 1% Ω	C_1	0.022 μf
R_2	1 K ± 5% Ω	C_2	0.082 μf
R_3	5 K pot Ω	C_x	0.01 μf
R_4	10M ± 5% Ω		
R_5	100 K ± 5% Ω		

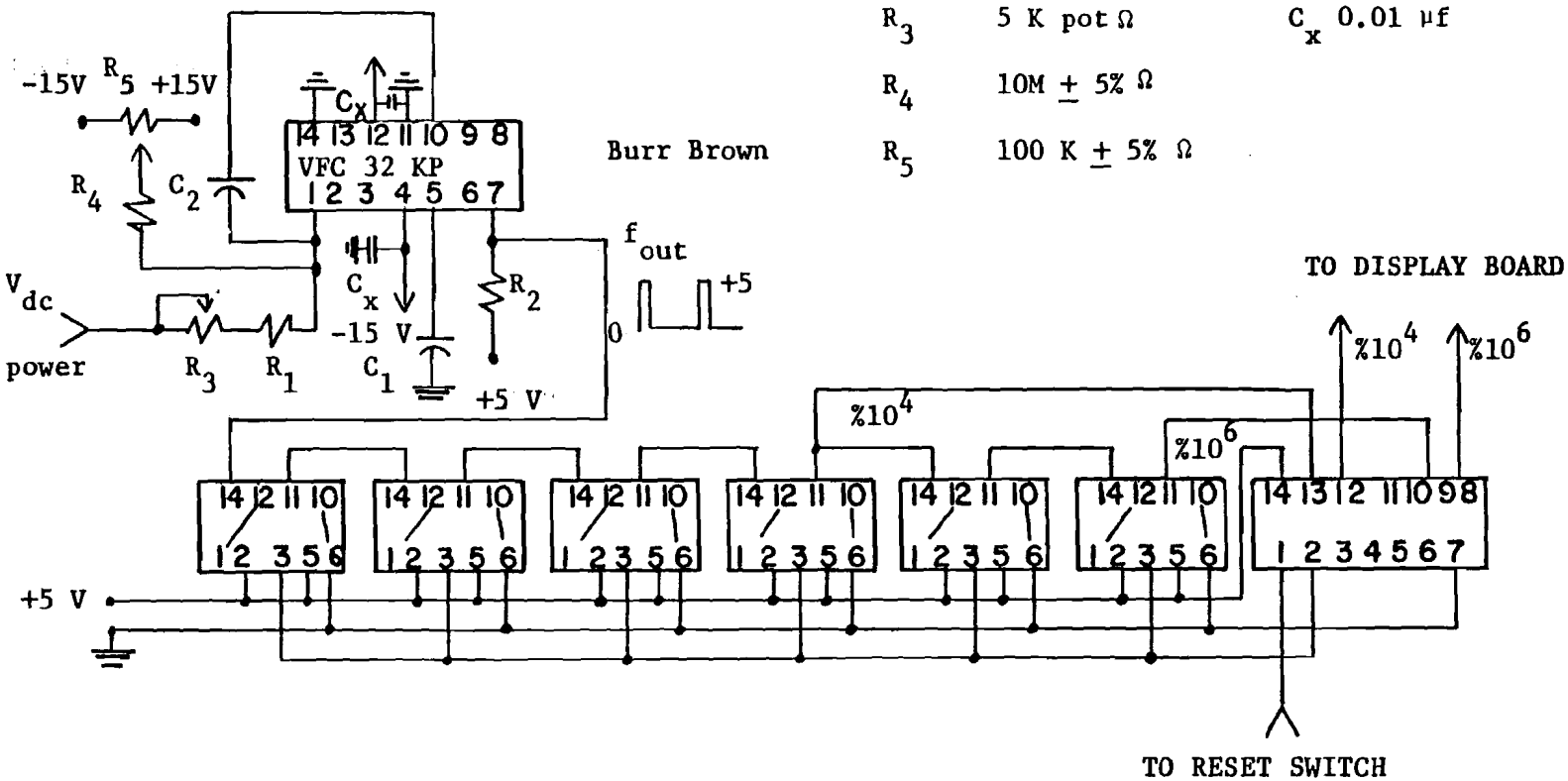

INTEGRATED CIRCUITS: (DIP)

1. 1 through 6: SN7490A Decade Counters (%10)

2. SN74LS04N: Inverter

3. VFC32KP: Voltage-to-Frequency Converter

FIGURE 2.3
VOLTAGE-TO-FREQUENCY CIRCUITS

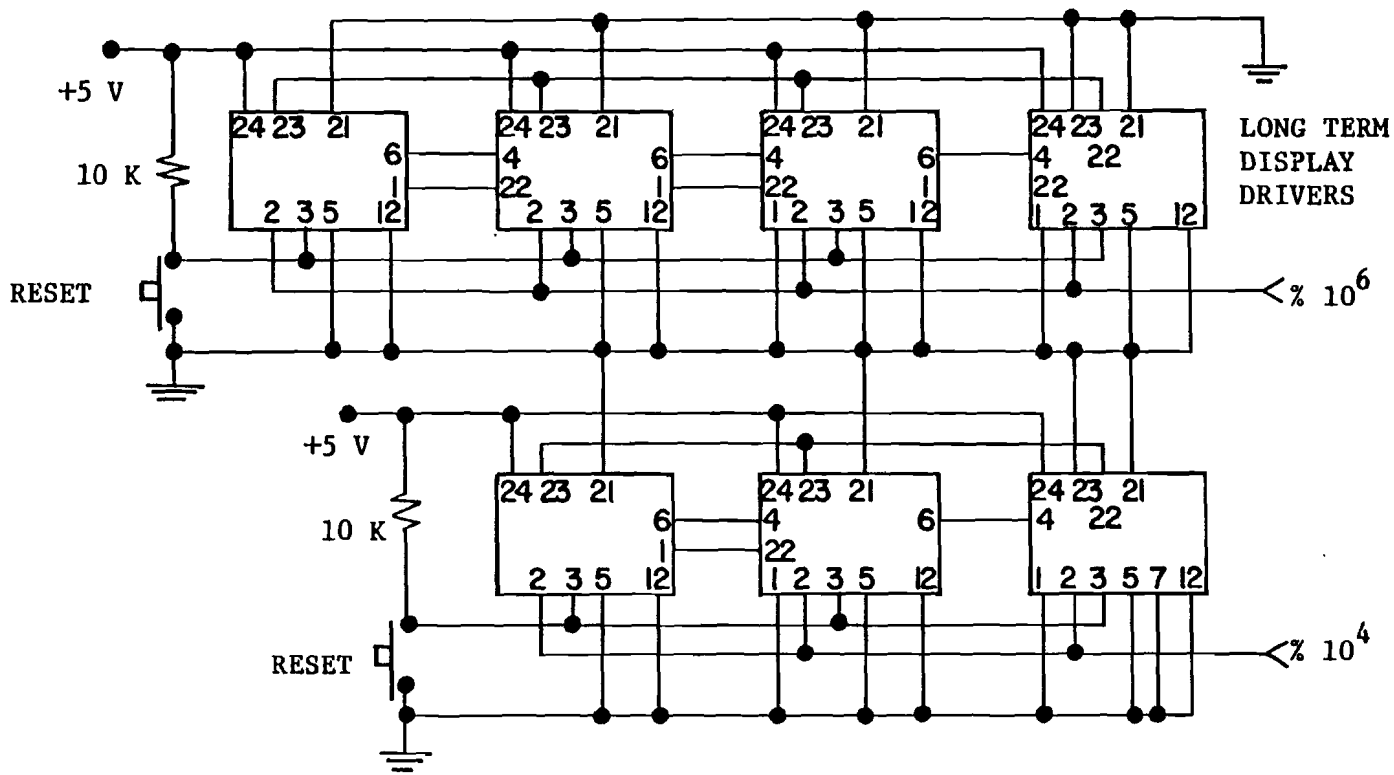

SEE TEXAS INSTRUMENTS TTL DATABOOK
FOR PIN DESIGNATIONS

SN74143 DISPLAY DRIVERS: PIN CONNECTIONS, (Excluding LED Driver 8, 9, 10, 11, 13, 14, 15, 16 Outputs)

FIGURE 2.4
DISPLAY DRIVER CIRCUITS

3.0 CALIBRATION

3.1 Initial Calibration

Each stage of the meter was calibrated during bench testing. Due to the lack of suitable variable-frequency power sources, dc-voltages with adjustable amplitudes were used as inputs to the electronic circuits.

3.1.1 Current Shunt and Voltage Divider (Transducers)

The current shunt was calibrated using 60 Hz. line current. The shunt was found to have a linear output from zero output at zero current to 50 mV at 30 Amps.

Since the voltage divider was constructed of fixed precision resistors, it could not be calibrated alone. It was, however, calibrated during the final calibration process by adjusting the op-amp current gain.

3.1.2 Op-Amp Circuits

These ciruits were calibrated by inputing the proper dc-voltage level corresponding to a specific generator voltage or current. Table 3.1 shows the relationship between the transducer output and op-amp output.

TABLE 3.1

Op-Amp Circuit Calibration

Gen. Voltage	Op-Amp Input	Op-Amp Output	Gen. Current	Op-Amp Input	Op-Amp Output
(volts)	(volts)	(volts)	(amps)	(mV)	(volts)
400	5.0	5.0	35	58.3	5.0
40	.5	.5	3.5	5.83	.5

3.1.3 RMS-to-DC Converters

These components were calibrated in the following manner:

a) Set V_{in} = 5.0 v, adjust R_{v4} such that V_{out} = 5.0 v

b) Set V_{in} = 0.5 v, adjust R_{v5} such that V_{out} = 0.5 v

c) Repeat a) and b) until V_{out} equals V_{in} without adjustment.

3.1.4 Analog Multiplier

Set R_{m8} so that with

$$V_v = V_i = 5.0 \text{ v, "Power"} = 2.5 \text{ v}$$

3.1.5 Voltage-to-Frequency Converter

The intial voltage-to-frequency conversion fucntion was set by resistors R_1 .. R_5 and capacitors C_1 and C_2. Adjustments were made in the following order:

a) Apply an input voltage that should produce an output frequency of 0.001 times full scale.

b) Adjust R_5 for proper output.

c) Apply the full scale input voltage.

d) Adjust R_3 for proper output

e) Repeat b) through d) until no further adjustment is needed.

3.2 Final Calibration

The completed kW-hr meter was calibrated as a unit using the arrangement shown in Fig. 3.1. First, various voltages and currents were applied and the meter output recorded on the FLUKE Data Logger. Table 3.2 and Figs. 3.2, 3.3, and 3.4 show these results.

Secondly, tests were performed to check the accuracy of the display board. Specific values of voltage and current were applied for a known period of time. The known input energy was compared with the measured and displayed energy. This data is shown in Table 3.3 and Fig. 3.5 with an error range of -6% to + 4.1%.

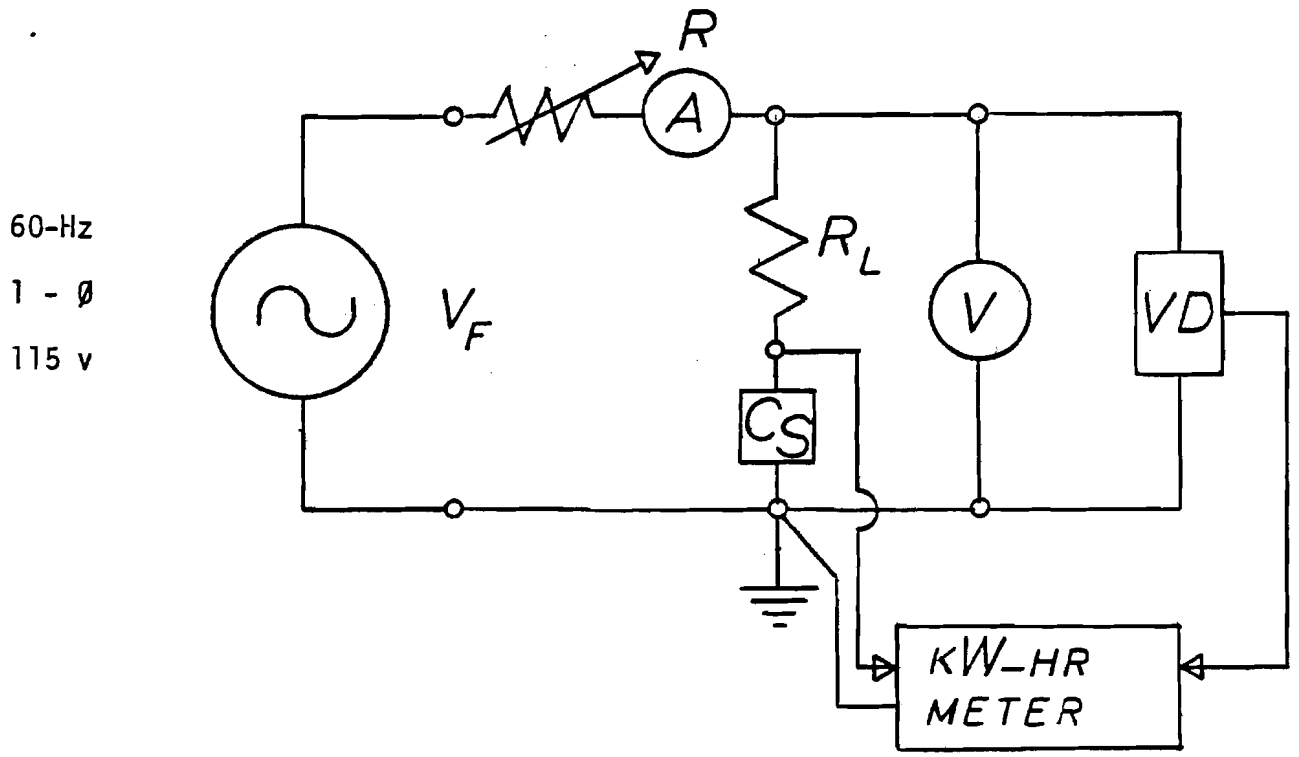

Power Source: Single phase house current

Apparatus:

R - Adjustable resistance load bank

R_L - Immersion heater

A - AC Ammeter

V - AC Voltmeter

CS - Current Shunt

VD - Voltage Divider

FIGURE 3.1
TEST SET-UP FOR FINAL CALIBRATION

TABLE 3.2

Kwhr Meter Calibration: Voltage, Current, and Power

Reading Number	Fluke Chan. 3 (dc volts)	DVM Load Voltage (ac volts)	Fluke Chan. 4 (dc volts)	Analog Meter Current (ac amps)	Fluke Chan. 8 (dc volts)	3.LV.LC (Calculated flow meters) (ac watts)
1	0.353	22.3	0.383	2.27	0.006	152
2	0.461	31.0	0.499	3.16	0.015	294
3	0.548	38.1	0.592	3.86	0.025	441
4	0.624	44.2	0.673	4.47	0.035	593
5	0.686	49.2	0.739	4.98	0.043	735
6	0.800	58.3	0.860	5.90	0.062	1032
7	0.875	64.4	0.941	6.50	0.076	1256
8	0.944	70.0	1.015	7.05	0.089	1481
9	1.018	75.8	1.093	7.65	0.104	1740
10	1.076	80.5	1.155	8.1	0.118	1956
11	1.123	84.3	1.204	8.46	0.129	2140
12	1.207	90.9	1.294	9.12	0.150	2487
13	1.242	93.9	1.333	9.4	0.159	2648
14	1.283	97.0	1.375	9.7	0.170	2823
15	1.303	98.4	1.390	9.84	0.175	2905
16	1.519	115.5	1.614	11.56	0.239	4006

Least-Square fit: $y = mx + b$, coorelation coeff = r^2

m=	80.091	7.506	16499.306
b=	-5.783	-0.580	23.288
r^2 =	1.000	1.000	1.000
x=	channel 3, dc volts	channel 4, dc volts	channel 8, dc volts
y=	Load Voltage, AC ln	Load Current, AC Amps	3 - Ø power, AC Watts

Power Source: Single Phase (60 Hz) AC line (115v, 20 amp)

Load: Immersion heater and resistance bank

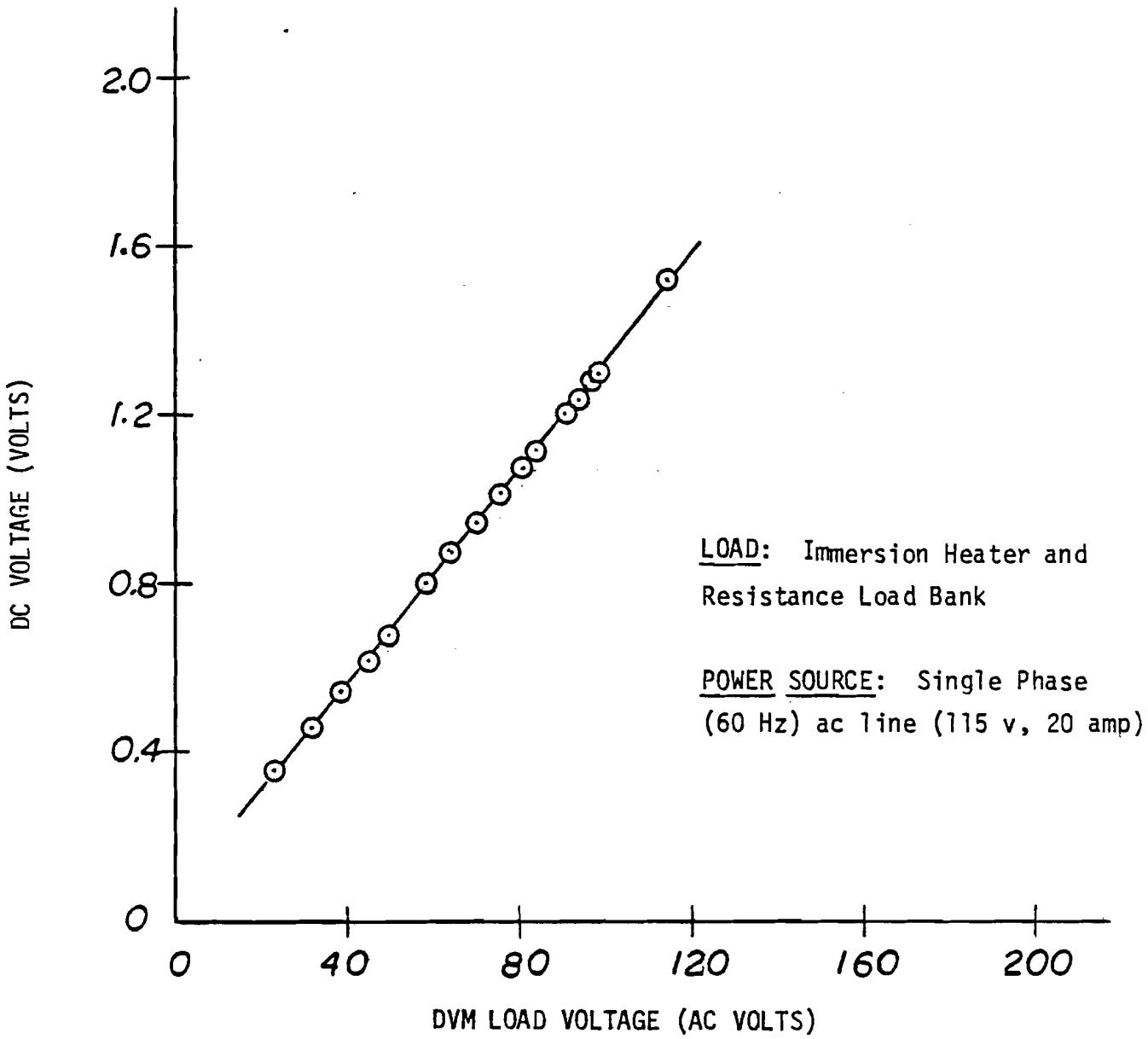

FIGURE 3.2

KILOWATT-HOUR METER CALIBRATION CURVE

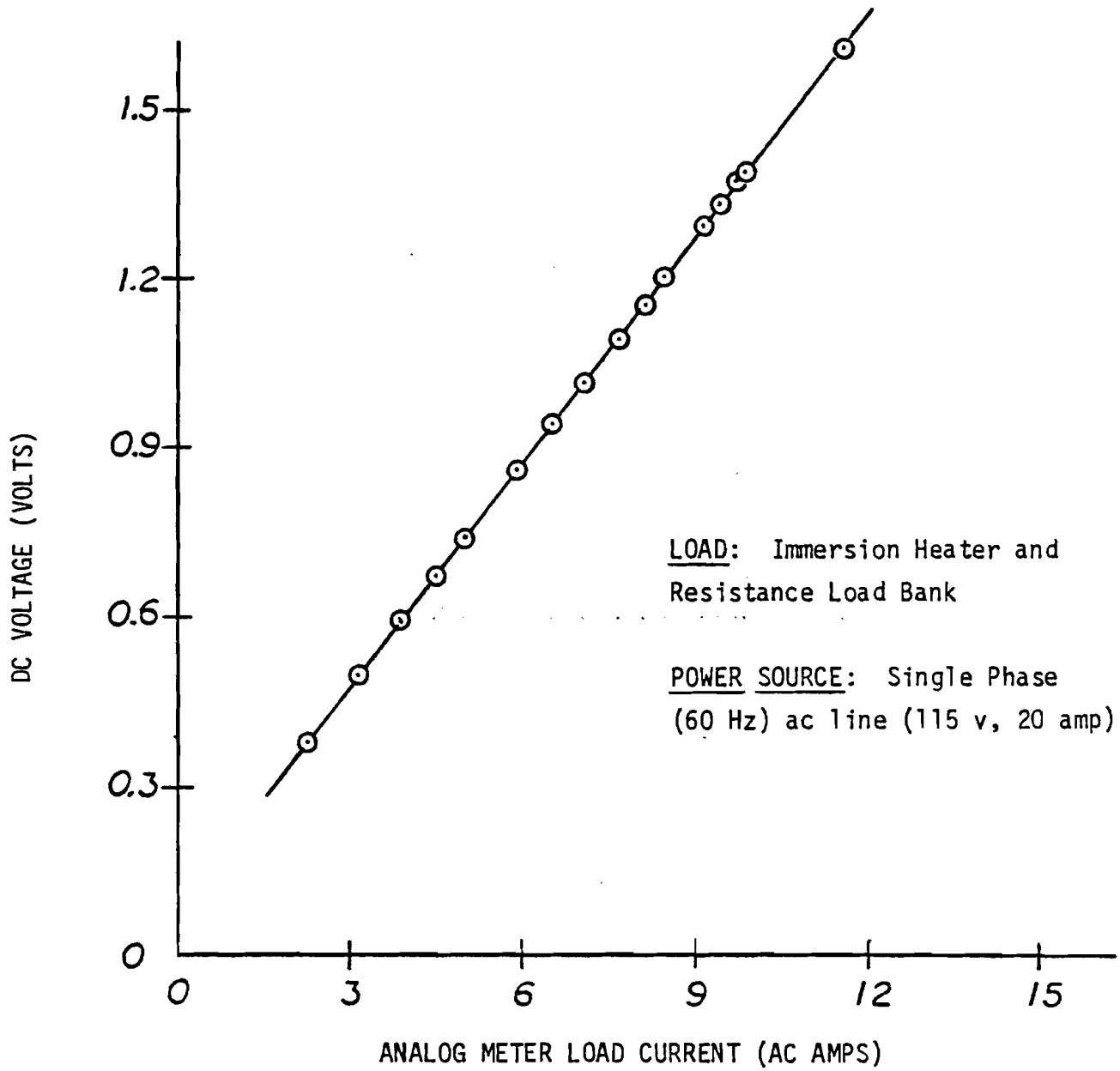

FIGURE 3.3

KILOWATT-HOUR METER CALIBRATION

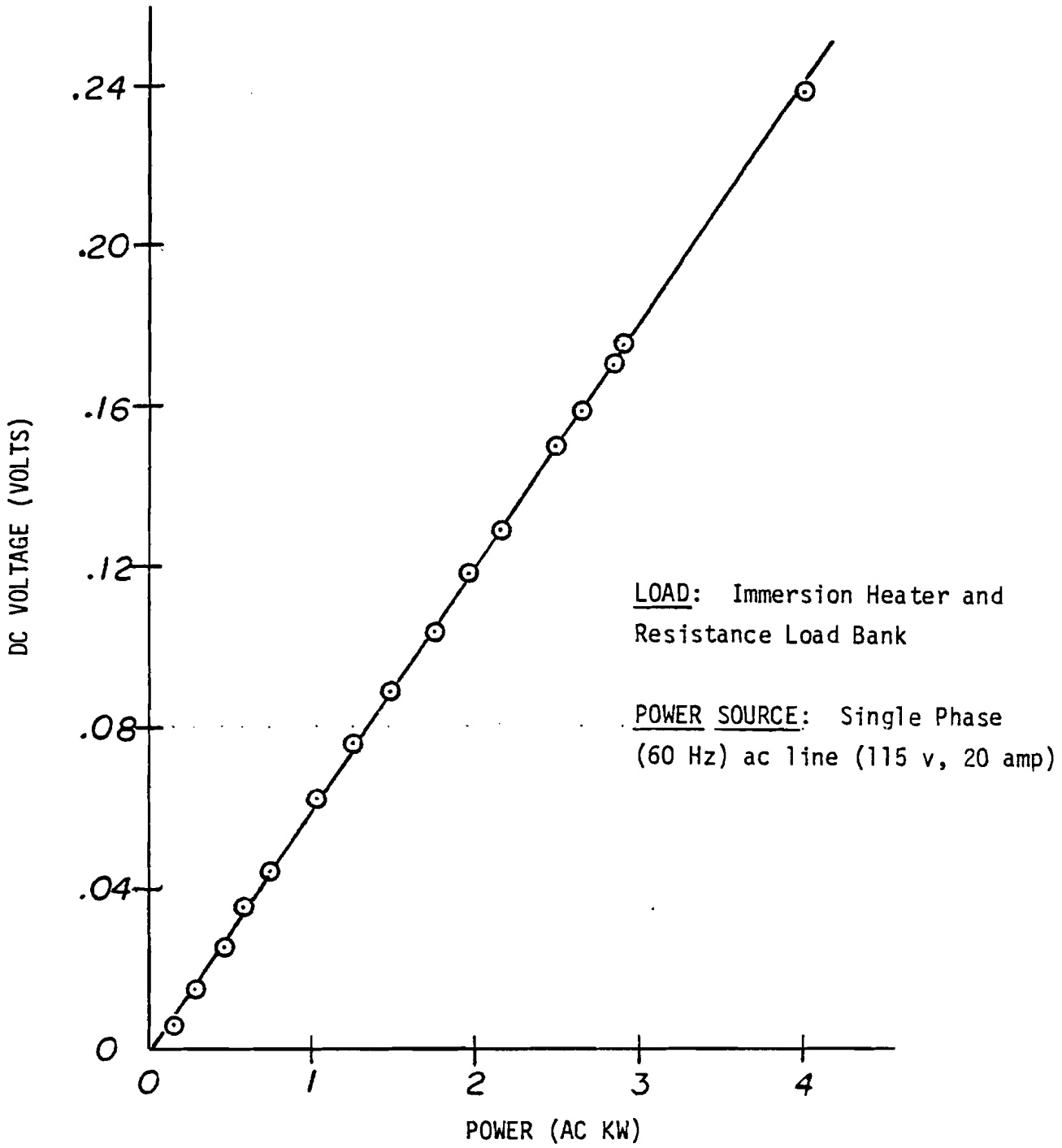

FIGURE 3.4

KILOWATT-HOUR METER CALIBRATION

TABLE 3.3

Meter Display Calibration

TEST NO.	1	2	3	4	5	6
V in (volts)	69.8	31.0	49.6	96.9	115.5	69.7
I in (amps)	7.0	3.16	5.0	9.75	11.56	7.04
P in (watts)	1446	294	744	2834	4006	1472
DISPLAY						
kW-hrs	5.7	4.0	1.1	2.9	2.7	2.1
E.T. (hrs)	3.736	14.416	1.463	1.022	0.664	1.378
Watts	1526	277	752	2838	4065	1524
% error	+4.1	-5.8	+1.1	+0.1	+1.5	+3.5

Note: ET = Elapsed Time

WATTS = kW-hrs/ET

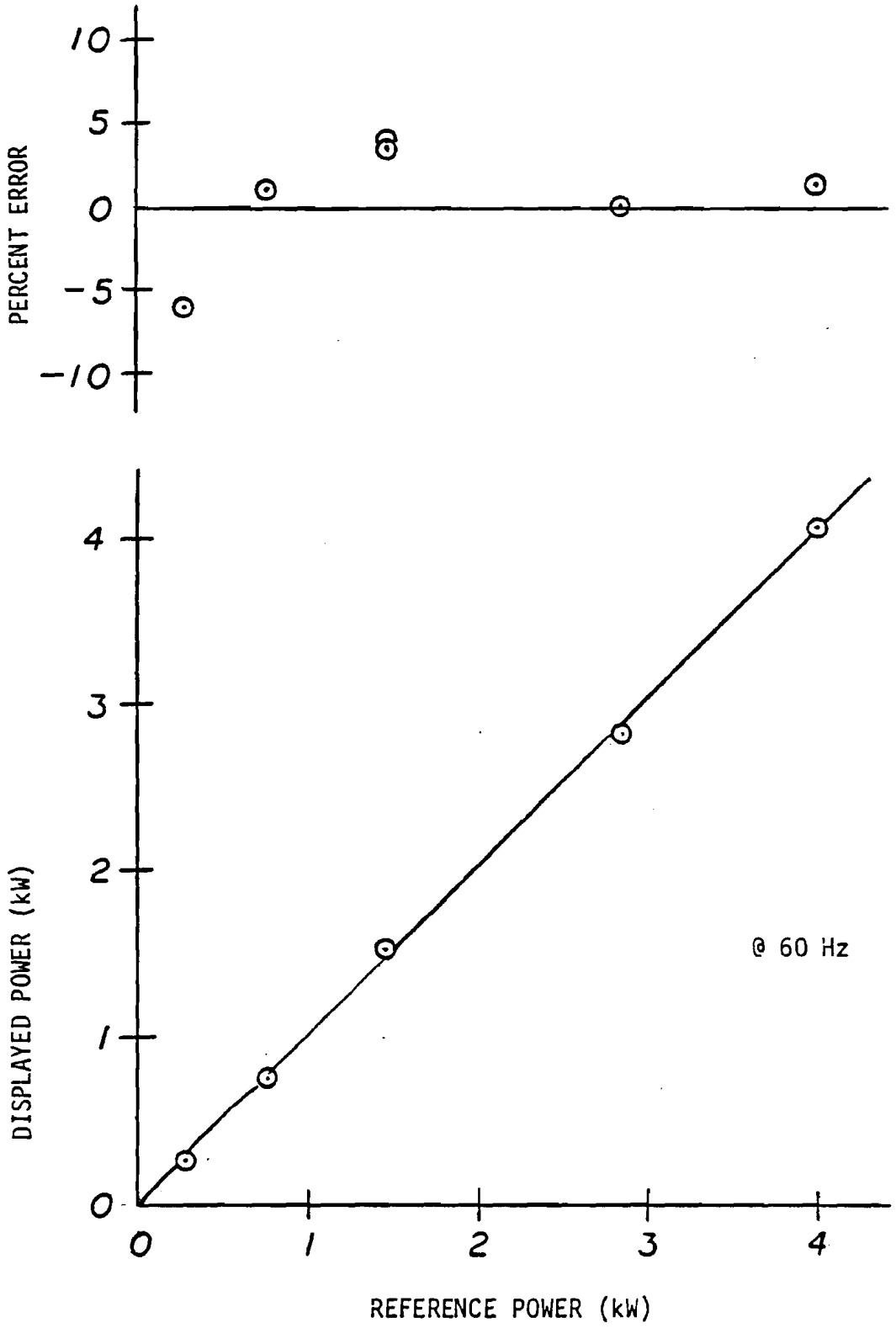

FIGURE 3.5
METER DISPLAY CALIBRATION

4.0 EVALUATION

4.1 General

The kW-hr meter was in use from Nov. 1978 to May 1979 during which time its performance was monitored. Based on the final calibration tests, the meter is assumed to be within ± 5 percent of the true energy (kW-hr) production. This is assumed to be an acceptable accuracy based on the design of the circuitry and the low overall cost (~$200.).

4.2 Difficulties

Two difficulties arose during the period of operation. First, because the power source for the meter comes from the ac line, whenever the household electricity goes out, the meter goes out. When power is returned, the meter must be manually reset. In addition, line pulses produced by switching off or on test equipment connected to the same house circuit would advance the meter display. This did not affect the Wind Furnace Test results as redundant up-to-date recordings were also kept.

4.3 Improvements

To correct the deficiencies noted, a single isolated dc-power source should be provided for the meter. This source should consist of a rechargeable battery pack, floated across the line, feeding a voltage-regulator circuit capable of supplying ± 15 volts @ 500 ma and +5 volts @ 1.0 amp.

In addition, to simplify the recording of data, the display could be modified to take advantage of the particular display driver used. These

drivers contain a 4-bit BCD patched output that could be fed into the BCD input printed circuit card of the FLUKE Data Logger. Whenever the thermal data is recorded (every 15 minutes), the kW-hr reading could also be recorded.

Other modifications would probably be incorporated if the kilowatt-hour meter were to be further developed or even another single meter produced.

4.4. Energy Production and Availability of the Wind Furnace

The kilowatt-hour meter was installed and operating from November 1978 through April 1979. Table 4.1 shows the kW-hrs produced by month as well as the down-times for the wind turbine.

TABLE 4.1

Kwhr Production and Availability of Wind Furnace

(November 1978 to April 1979)

Month	Total Hours	Down-Time (Hours)	Percent of Total	Kwhr Production
Nov	720	72	10.0	--
Dec	744	640	86.0	150
Jan	744	25 (0)	3.4 (0)	794
Feb	672	12.25	1.8	1073.1
Mar	744	51.1 (20)	6.9 (2.7)	936.1
Apr	720	122.5 (82)	17.0 (11.4)	394.9

Notes:

1. Down-time due to absence of resident:

   Jan 25 hours

   Mar 31

   Apr 40.5

2. Down-time due to re-assembly of pitch rod connector: Nov 28 through Dec. 27, 712 hours.

3. Numbers in parentheses indicate down-time due to or work on micro-processor controller (Feb., Mar. , Apr.), spinner electronics and associated apparatus and miscellaneous repairs.

5.0 ACKNOWLEDGEMENT

The UMass kilowatt-hour meter was designed, built and tested by W. Clark, M. Edds, and F. Perkins for use with the UMass Wind Furnace. The design was initiated under departmental funding with the final test and evaluation being funded under Contract PF 67025F from Rocky Flats Plant, Rockwell International, Golden, CO.

6.0 APPENDIX

6.1 Following is a list of components used, with the rated capacities for each. The numbers correspond to numbers found on Fig. 2.2.

A. Op-Amps (A1 and A2) A741 mini-dip

B. Resistors: ($\pm$ 5% unless noted), ohms:

1.	R_L	Generator load resistance	~10 Ω/phase
2.	R_{D1}	Voltage divider	928K $\pm$ 1%
3.	R_{D2}	Voltage divider	11.8K $\pm$ 1%
4.	R_{V1}	Op-Amp, voltage	2.2K
5.	R_{V2}	Op-Amp, voltage	1K
6.	R_{V3}	Op-Amp, voltage	5K (pot)
7.	R_{off}	Op-Amp, offset adjustment	10K (pot)
8.	R_{I1}	Op-Amp, current	1K
9.	R_{I2}	Op-Amp, current	200K (pot)
10.	R_{V4}, R_{I4}	RMS-to-DC converter, gain setting	10K (pot)
11.	R_{V5}, R_{I5}	RMS-to-DC converter	1.0M
12.	R_{V6}, R_{I6}	RMS-to-DC converter	10K (pot)
13.	R_{m7}	Multiplier	4.7K
14.	R_{m8}	Multiplier, gain setting	5K (pot)
15.	R_{m9}	Multiplier	2.2K
16.	R_{m10}	Multiplier	47K

C. Capacitors: (electrolytic unless noted) 0.01 μf ceramic

1. C_x

C C_{v1}, C_{I1} RMS-to-DC converter 10 μf
Averaging capacitor, (Response Time ~ ~ 50 ms)

D. Current Shunt 50 mV = 30 amps.
General Electric, Laboratory-type

Digital Circuits

COMPONENT:				QUANTITY:
1.	VDC 32 KP	Burr Brown	Voltage-Frequency Converter	
2.	SN7490A	TI	Decade Counter (% 10)	6
3.	SN74LS04	TI	Hex Inverter	1
4.	SN72143	TI	Display Crivers	7
5.	TIL302	TI	LED Numeric Displays	7