Wind Turbine Design, Performance, And Economic Analysis

UM-WF-TR-78-3

WIND TURBINE DESIGN,

PERFORMANCE, AND ECONOMIC ANALYSIS

Technical Report

by

James H. Sexton

Mechanical Engineering Department

University of Massachusetts

Amherst, Massachusetts 01003

May 1978

WIND TURBINE DESIGN, PERFORMANCE, AND ECONOMIC ANALYSIS

A Report

By

James H. Sexton

Approved as to style and content by:

(Co-Chairman of Committee)

(Co-Chairman of Committee)

May, 1978

ACKNOWLEDGEMENTS

I am most grateful to Professors Heronemus and Cromack for their interest, guidance, and patience. My debt will never be fully repaid.

I am grateful to all of the students and faculty of the UMass Wind Power Program. They have all been a constant source of knowledge, enlightenment, and inspiration.

TABLE OF CONTENTS

LIST OF TABLES

LIST OF FIGURES

ABSTRACT

This paper is an investigation of the economic feasibility of small scale (1 to 70 kw) wind energy conversion systems (WECS). It can be shown that the wind system productivity and therefore the relative cost of the product which it produces is completely dependent on the wind regime under consideration. The mean wind speed, standard deviation, and wind profile are the most significant parameters to be used in the investigation of cost of product from a wind system. The purpose of this work is not to find an optimum wind system, but to give the reader enough information to make an informed decision as to whether or not a wind system configuration could meet the particular need under consideration; the wind system appropriate to a residential home owner is quite different from that for a dairy farmer, for example. The decision ultimately boils down to the cost of usable energy, i.e., cents/kwhr of those kwhrs that can be used. Various wind machines will be designed and priced. They will then be superimposed onto different wind regimes modeled by the Weibull distribution for a first approximation of the cost of product at that site using that machine. It will be clear that the same machine will have different cost effectiveness at different sites, and that the cost-of-useful-energy-product will vary, site-to-site, for the same machine.

PART I - WIND ANALYSIS

PART I

CHAPTER I. INTRODUCTION

Since the Arab oil embargo, we have seen increasing emphasis placed on energy and its conservation. President Carter, in his speeches of April 18th and 20th of 1977, called the energy situation "the greatest challenge that our country will face during our life time". It is the opinion of the author that WECS can play a significant role in meeting this challenge. Both small and large machines have the potential for relatively low-cost production; even without the advantages of mass production they offer one of the cheapest means of producing solar electricity available today. The problem of energy storage will not be dealt with in this report, although it is felt it can be handled in many parts of the country because hydroelectric dams and underground gas formations suitable for compressed air storage are abundant in many windy areas. It is an important fact that is not widely appreciated, that the amount of wind energy available on an annual basis is as large as the average energy flux of sunlight in many regions. The average wind power on the Great Plains over the course of a year is over 200 Watt/M^2.[1] In a low gap in the Rocky Mountains near Medicine Bow in southern Wyoming, for instance, the annual average wind speed is 21 miles per hour and the energy flux is 500 Watt/M^2.

In the next few years more effort and attention will be focused on conservation and developing new sources of energy than the combined

efforts in this area during the past 50 years of relatively plentiful and inexpensive energy. It is the purpose of this report to investigate the feasibility of extracting power from wind, economically.

Universal characteristics of the wind, its variability, and dispersion (low power density) are dominant considerations for any wind power system design. Those characteristics combined with the need of producing a safe, reliable, and useful form of energy at a competitive price make the use of wind power a challenging engineering task. In general, WECS are large rotating systems coupled to the wind, with its fluctuations. Thus, large torque transients and power fluctuations can occur with disturbingly small time constants. The wind characteristics, its distribution over the swept area of the blades, and amount of turbulance are of concern and are not fully understood. They are currently being studied at UMass with the Wind Furnace 1 and at many other places as well.

CHAPTER II. GENERAL INFORMATION

Newton's Second Law and Momentum Equations

Energy is equal to power integrated over time. The energy available in the wind is the kinetic energy of the air particles. In order to capture this energy, it is necessary to use a windmill. A windmill, in its simplest terms, extracts momentum from and transfers it in the form of available power to a rotating shaft. As a first approximation to determine the maximum possible output of a wind turbine, the following will be assumed:

1. Blades operate without drag;
2. A slipstream that is well defined separates the flow passing through the rotor disc from that outside the rotor;
3. The static pressure in and out of the slipstream far ahead of and behind the rotor are equal to the undisturbed free-system static pressure (P_2-P);
4. Thrust loading is uniform over the rotor;
5. No rotation is imparted to the flow by the rotor.[2]

The mass flow rate of air M passing through a rotor of area A (see Figure 1.2.1) is:

$$M = \rho AV \qquad 1.2.1$$

ρ = Air Density

V = Wind Velocity at the Rotor

CONTROL VOLUME OF A WIND TURBINE

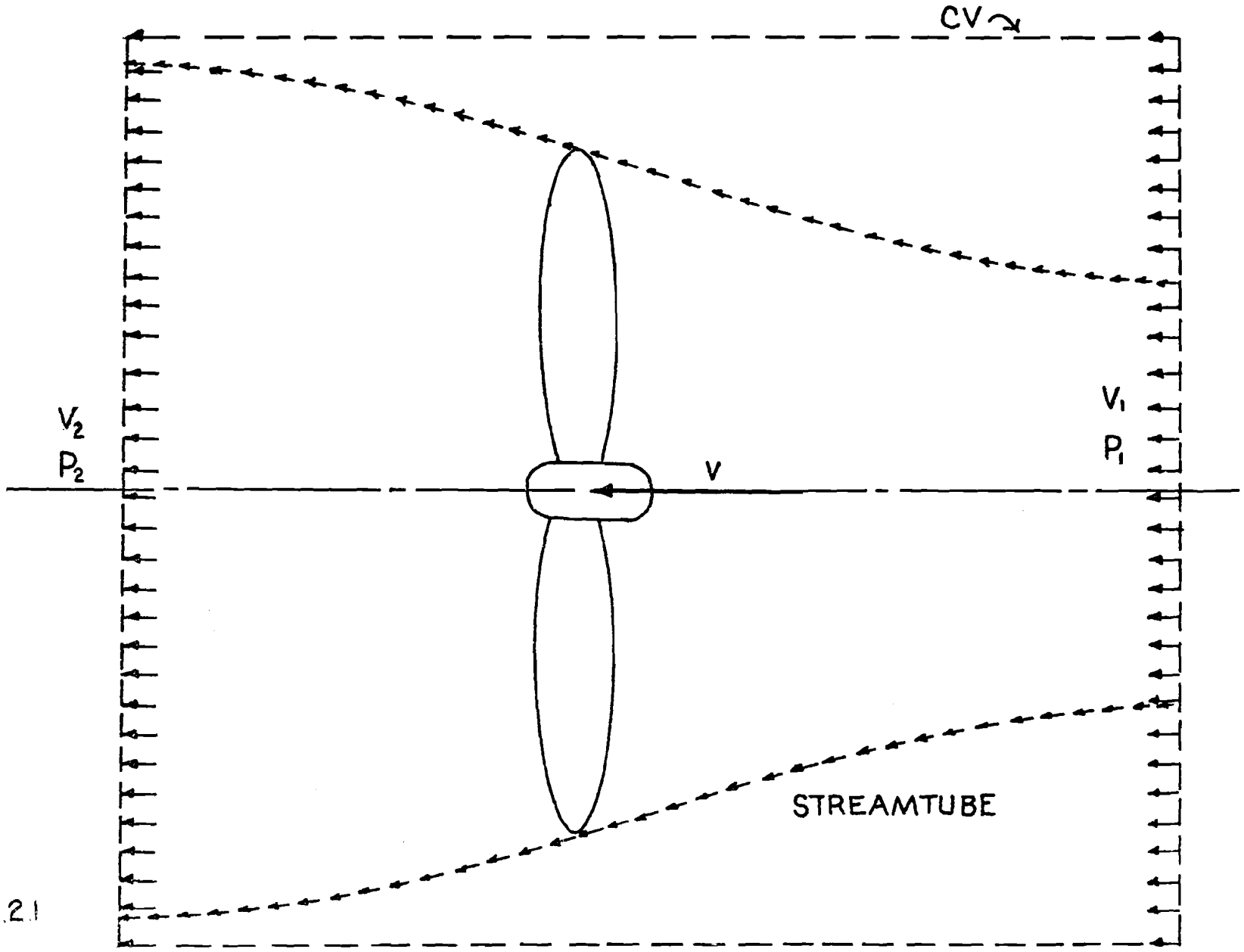

FIGURE 1.2.1

The kinetic energy available in the control section is expressed as:

$$K.E = \rho \tfrac{1}{2} A V^2 \qquad 1.2.2$$

The thrust at the rotor is equal to the rate of change of the momentum between states 1 and 2:

$$\text{Thrust} = \frac{d\rho AV}{dt} = \rho AV(V_2^2 - V_1^2) \qquad 1.2.3$$

V_1 = Upstream Velocity

V_2 = Downstream Velocity

The power exchange by the rotor is equal to the rate of the change in kinetic energy and is expressed as:

$$\text{Power} = \frac{d}{dt}\left(\tfrac{1}{2} M V^2\right) = \rho \tfrac{1}{2} AV(V_2^2 - V_1^2) \qquad 1.2.4$$

V the wind velocity at the rotor is equal to:

$$V = \tfrac{1}{2}(V_2 + V_1)$$

Substituting for V in equation (4) and noting $V_1 - V = V - V_2$ using $a = \frac{V_2}{V_1}$ we have:

$$P = \tfrac{1}{4}\rho AV\ (1+\frac{V_2}{V_1})(1-\frac{V_2^2}{V_1})$$

$$= \tfrac{1}{4}\rho AV\ (1+a)(1-a^2)$$

The maximum power for any given wind speed is equal to $\frac{\partial P}{\partial a} = 0$. This yields:

$$a = \frac{V_2}{V} = \frac{1}{3}$$

Therefore, the theoretical maximum power that can be extracted from the wind is:

$$P_{max} = \frac{8}{27}\ \rho AV^3 \qquad 1.2.5$$

The maximum power coefficient is expressed as:

$$Cp = \frac{P_{max}}{AV^3} = .593 \quad , \text{ The Betz Coefficient} \qquad 1.2.6$$

This represents the maximum theoretical power coefficient. In actual practice the Cp's are quite a bit lower (.35 to .45) and are a function of blade geometry and tip speed ratio.[3] It is clear from the preceeding equations, that controlling parameters are the wind speed and wind wheel diameter. Figure 1.2.2 shows the theoretical and empirical power curves, wind generator, three blades, and diameter of 40 feet.

For a modern low solidity horizontal axis propeller type rotor

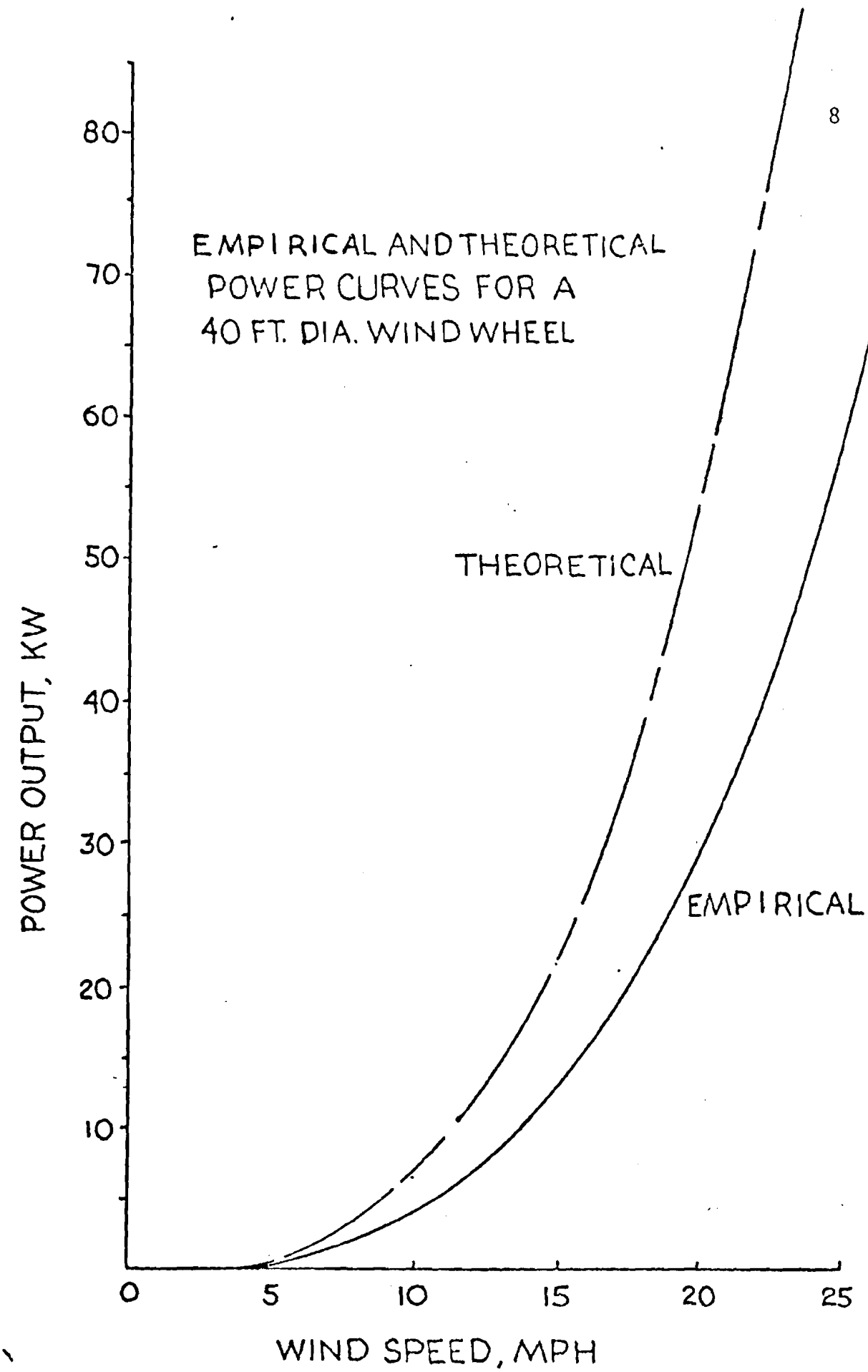
EMPIRICAL AND THEORETICAL
POWER CURVES FOR A
40 FT. DIA. WIND WHEEL
THEORETICAL
EMPIRICAL
POWER OUTPUT, KW
80
70
60
50
40
30
20
10
0
5
10
15
20
25
WIND SPEED, MPH

FIGURE 1.2.2

with optimum or near optimum (linear taper linear twist) blade, the maximum power coefficient occurs at a tip speed ratio of about 7.5. The tip speed ratio is expressed as:

$$X = \frac{R\Omega}{V}$$

Where V = the Wind Velocity

R = Radius of the Wind Wheel

Ω = Radians Per Second

CHAPTER III. ESTIMATING THE PRODUCTIVITY OF A WIND REGIME: THE WEIBULL DISTRIBUTION

The Weibull distribution is widely used in engineering because of its versatility. Originally proposed for the interpretation of fatigue data, its use now extends to many other engineering problems. In recent years the Weibull distribution has successfully been applied to the description of wind speed distribution by Davenport (1963), Justus (1974), Baynes (1974), Zimmer et al (1975), Wentink (1975), and by Justus et al (1976). The advantage of the Weibull distribution over many others is that it takes into account the mean wind speed as well as the standard deviation about the mean wind speed. Others, such as the Cy square and the Rayleigh take into account only the mean wind speed.

The Weibull probability density function is expressed as:

$$f(v) = \left[\frac{K}{C-Vo}\left(\frac{V-Vo}{C-Vo}\right)^{K-1}\right] \{EXP\ -\left(\frac{V-Vo}{C-Vo}\right)^{K}\} \qquad 1.3.1$$

Where the parameters which are usually determined experimentally are Vo, K, and C:

Vo is the expected minimum value of V, also known as the location parameter

K is the Weibull scope, commonly known as the shape parameter

C is the Weibull scale parameter

A plot of f(v) is shown in Figure 1.3.1. The cumulative distribution (velocity duration curve) is expressed as:

$$F(v) = \int_{vo}^{v} f(v)$$

$$= \int_{vo}^{v} \left[\frac{K}{C-vo} \left(\frac{v-vo}{C-vo}\right)^{K-1}\right] \left\{EXP \left[-\left(\frac{v-vo}{C-vo}\right)^{K}\right]\right\} dv$$

Letting:

$$\left(\frac{v-vo}{C-Vo}\right)^{K} = y$$

Then:

$$\left[K\left(\frac{v-vo}{C-vo}\right)^{k-1}\right]\left[\frac{1}{C-vo}\right] dv = dy$$

Or:

$$F(v) = \int_{yo}^{y} e^{-y} dy$$

$$= -EXP\left(\frac{v-vo}{C-vo}\right)^{k} \Big|_{vo}^{v}$$

Therefore:

$$F(v) = 1-EXP\left[-\left(\frac{v-vo}{C-vo}\right)^{k}\right] \qquad 1.3.2$$

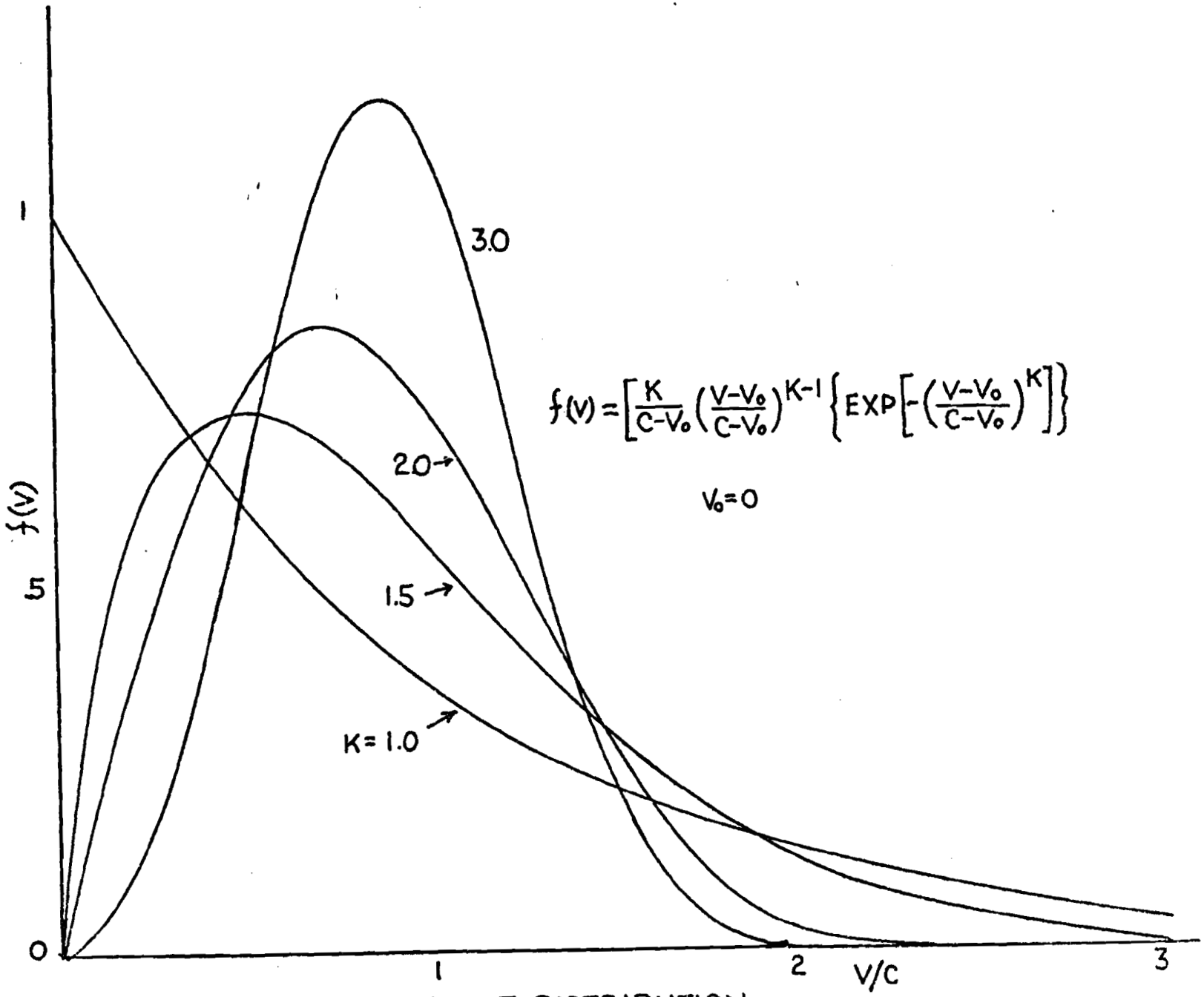

$$f(V) = \left[\frac{K}{C-V_0}\left(\frac{V-V_0}{C-V_0}\right)^{K-1}\left\{EXP\left[-\left(\frac{V-V_0}{C-V_0}\right)^{K}\right]\right\}\right]$$

$V_0 = 0$

WEIBULL CUMULATIVE DISTRIBUTION

FIGURE 1.3.1

It is reasonable to assume that the lower bound of the velocity Vo is equal to zero. Equation 1.3.2 reduces to:

$$F(v) = 1\text{-EXP}\left[-\left(\frac{V}{C}\right)^K\right]$$

Data relating the Weibull K and C values to the mean wind speed ($\bar{V}$) and the standard deviation (σ) obtained from Justus et al (1976) are plotted on Figures 1.3.2 and 1.3.3. Equations for K and $C/\bar{V}$ were obtained from a least squares curve fit procedure and are expressed as:

$$K = -3.078 + 20.962\ \sigma/\bar{v} + 9.516\ \text{EXP}\sigma/\bar{v} \qquad 1.3.4$$

and

$$c/\bar{v} = 2.73 + 2.18\ \sigma/\bar{v} - 1.936\ \text{EXP}\ \sigma/\bar{v} + .1827\ \text{EXP}\ 2\sigma/\bar{v} \qquad 1.3.5$$

Traditionally, the Weibull values K and C are expressed in terms of the Gamma function (Γ). However, for ease of computer implementation, the values of K and C in terms of the mean wind speed and standard deviation are expressed as above. Given that good data is available for the mean wind speed $\bar{V}$ and the standard deviation σ, the Weibull K and C values can be obtained from equations 1.3.4 and 1.3.5 respectively.

The wind speed distribution is often expressed as a "velocity duration curve" in hours per year for which V>Vx ie H(v>vx) = 8760 1-f(v>vx). Thus, the Weibull velocity curve would be expressed

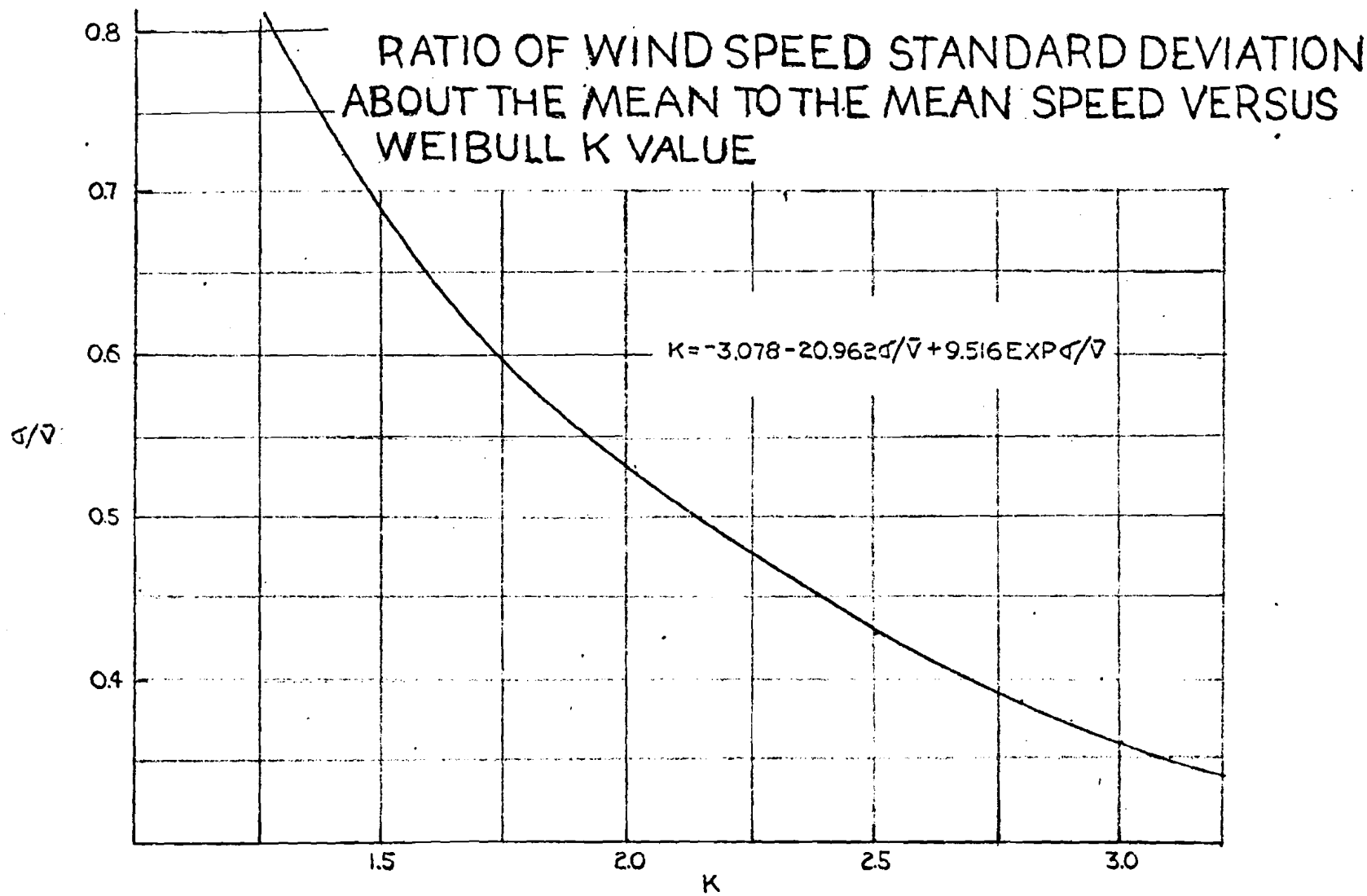
RATIO OF WIND SPEED STANDARD DEVIATION ABOUT THE MEAN TO THE MEAN SPEED VERSUS WEIBULL K VALUE
K=-3.078-20.962σ/V̄+9.516EXPσ/V̄
0.8
0.7
0.6
0.5
0.4
σ/V̄
1.5
2.0
2.5
3.0
K

FIGURE 1.3.2

RATIO OF WEIBULL C TO MEAN WIND SPEED VERSUS RATIO OF WIND SPEED STANDARD DEVIATION ABOUT THE MEAN TO THE MEAN SPEED

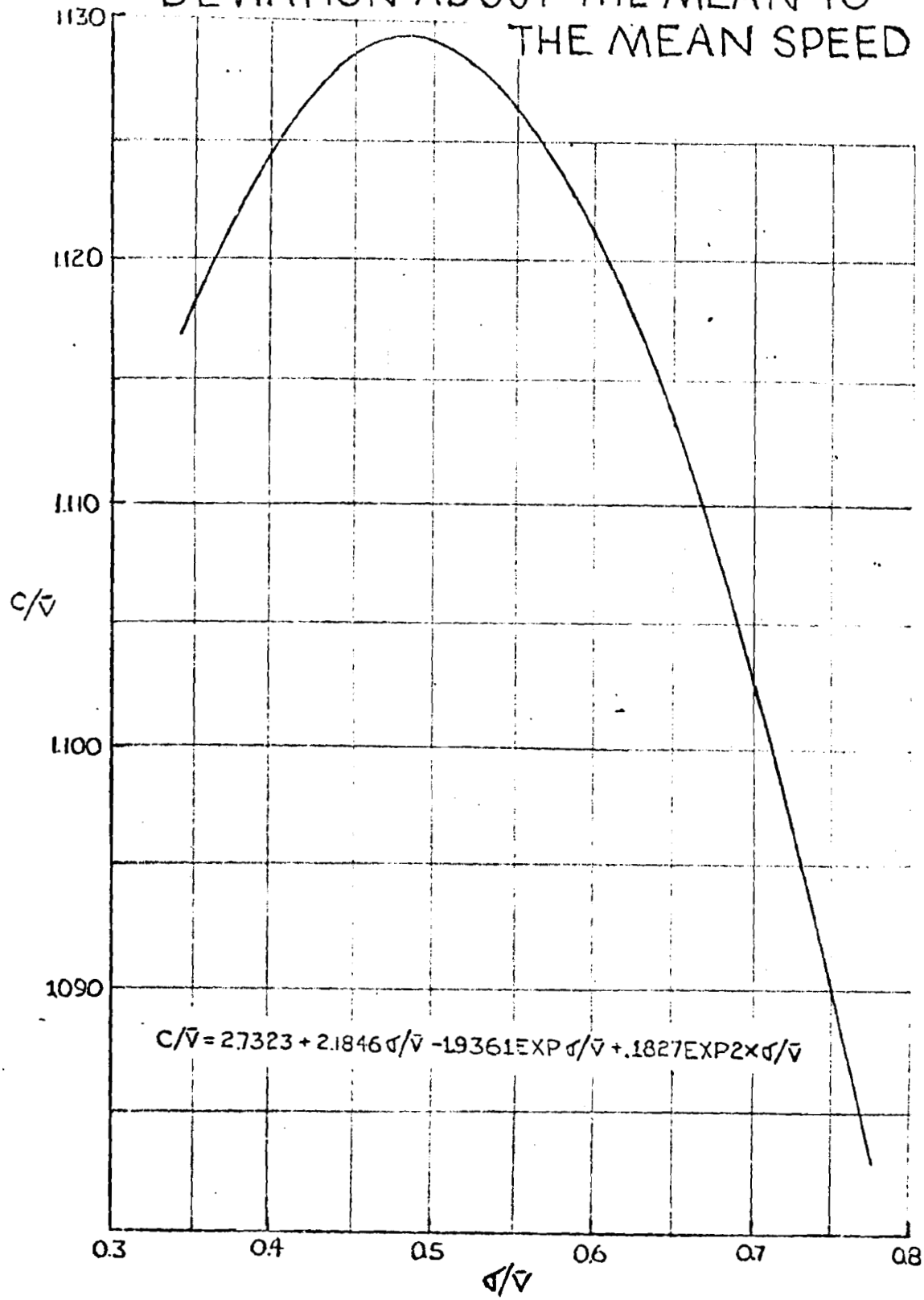

FIGURE 1.3.3

mathematically as:

$$H(v>vx) = 8760EXP\left[-(Vx/c)^{k}\right] \qquad 1.3.6$$

Using wind data available from Birmingham, Alabama, and Wallops, Virginia, the Weibull values of K and C were obtained for each site from equations 1.3.4 and 1.3.5. The velocity duration curves were then plotted, including the conditions for wind systems:

TCI = number of hours cut in wind speed is exceeded

TR = number of hours rated wind speed is exceeded

TCO = number of hours cut out wind speed is exceeded

Those values were then used in equation 1.3.6 to obtain the velocity duration curves for each site: see Figures 1.3.4 and 1.3.5. Those sites were chosen as being representative of high and low wind regions. Clearly, if wind machines were placed on those sites, the Virginia site would be much more productive than the Alabama site. The important question remains: how to calculate the productivity of each machine at each site? More importantly, how should one size a wind machine at either of those sites (or any other site) with good available wind data, to make it economic?

VELOCITY DURATION CURVE
BIRMINGHAM, ALABAMA

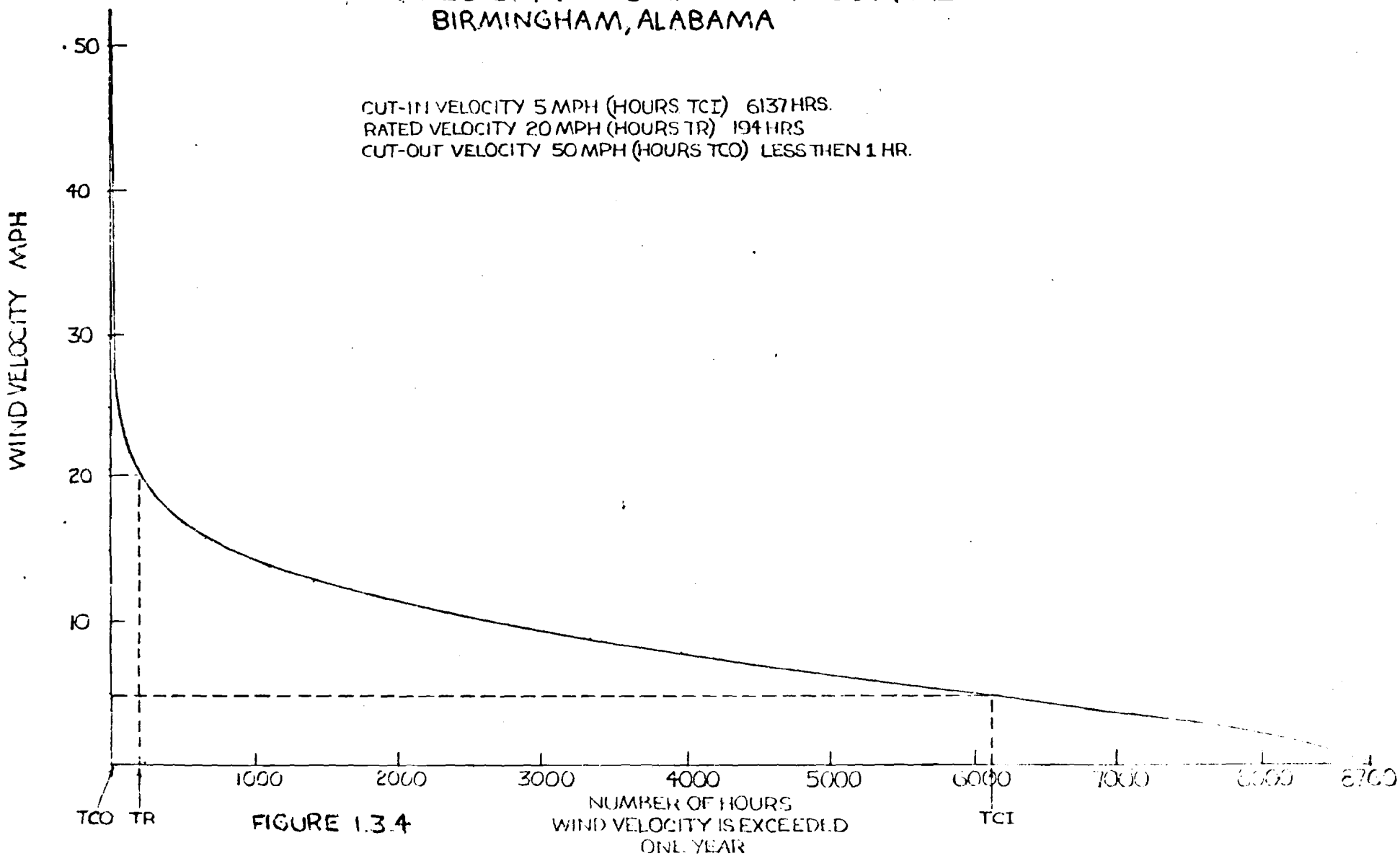

FIGURE 1.3.4

VELOCITY DURATION CURVE
WALLOPS, VIRGINIA

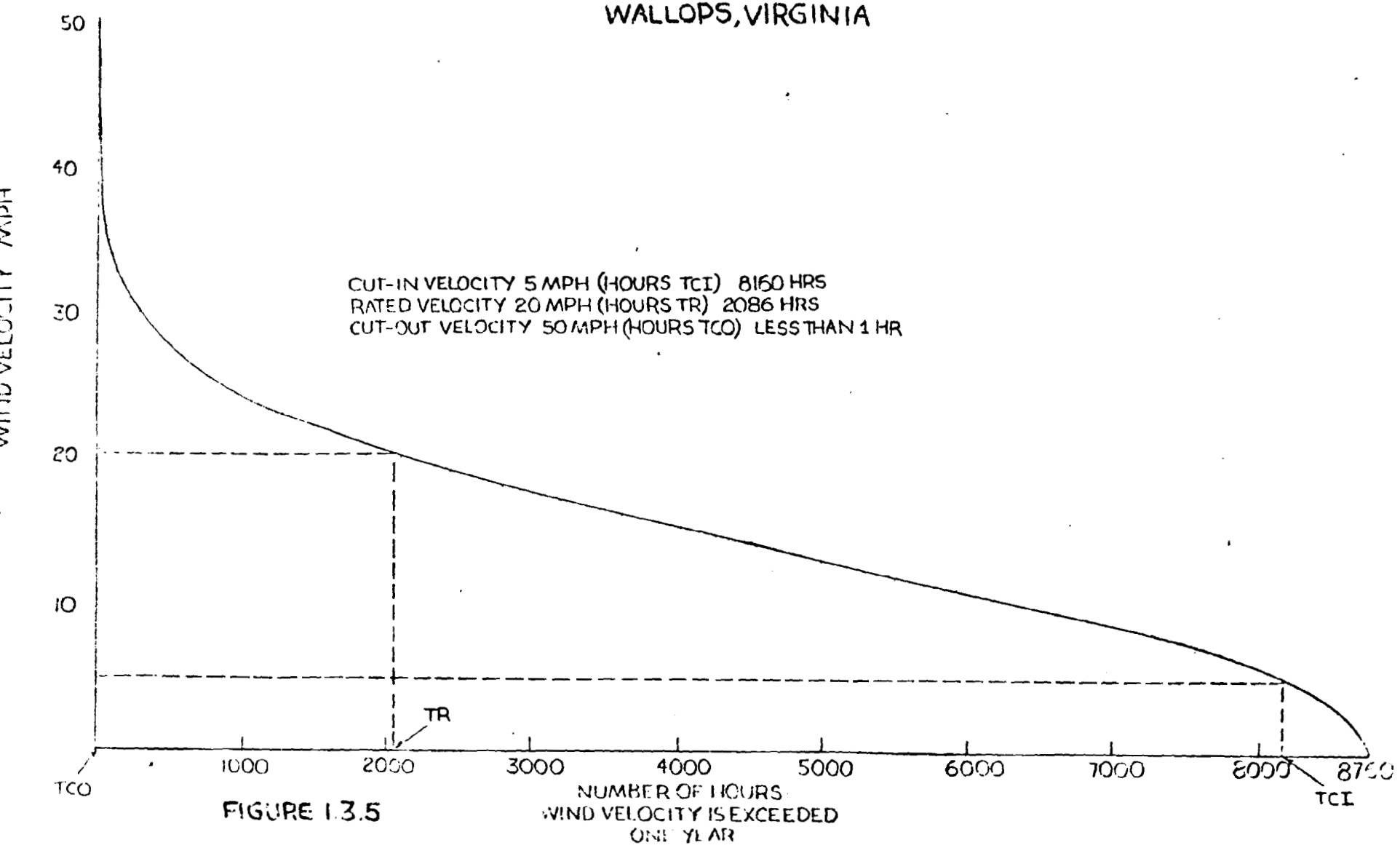

FIGURE 1.3.5

CHAPTER IV. WIND ENERGY CONVERSION SYSTEM AND THE WEIBULL DISTRIBUTION

It is important to superimpose the characteristics of any given WECS on to any given Weibull distribution, thus obtaining a good idea of the WECS' productivity on any site. For example, to produce a 40kw WECS for $10,000 and advertise it at $250 per kw does not fully inform the public concerning the "real" cost of the machine. It would be more meaningful to calculate and advertise its annual productivity. By doing so, cost per useable kw/hr can be determined.

From momentum theory a WECS rated output can be expressed as:

$P = Cp\frac{1}{2}\rho\pi R^2 V_r^3$ for horizontal axis machines.

Where:

Cp = Power Coefficient

ρ = Density of Air

R = Radius of the Rotor

V_r = Rated Wind Speed

From work done by Cromack and LeFebvre (1977), Figure 1.4.1 shows power coefficient as a function of tip speed ratio and blade design for a number of three-bladed wind wheels thought to be of high performance. Figure 1.4.2 shows power coefficient as a function of tip speed ratio and blade design for a two-bladed wind wheel. It is

FIGURE 1.4.1

POWER COEFFICIENT AS A FUNCTION OF TIP-SPEED RATIO

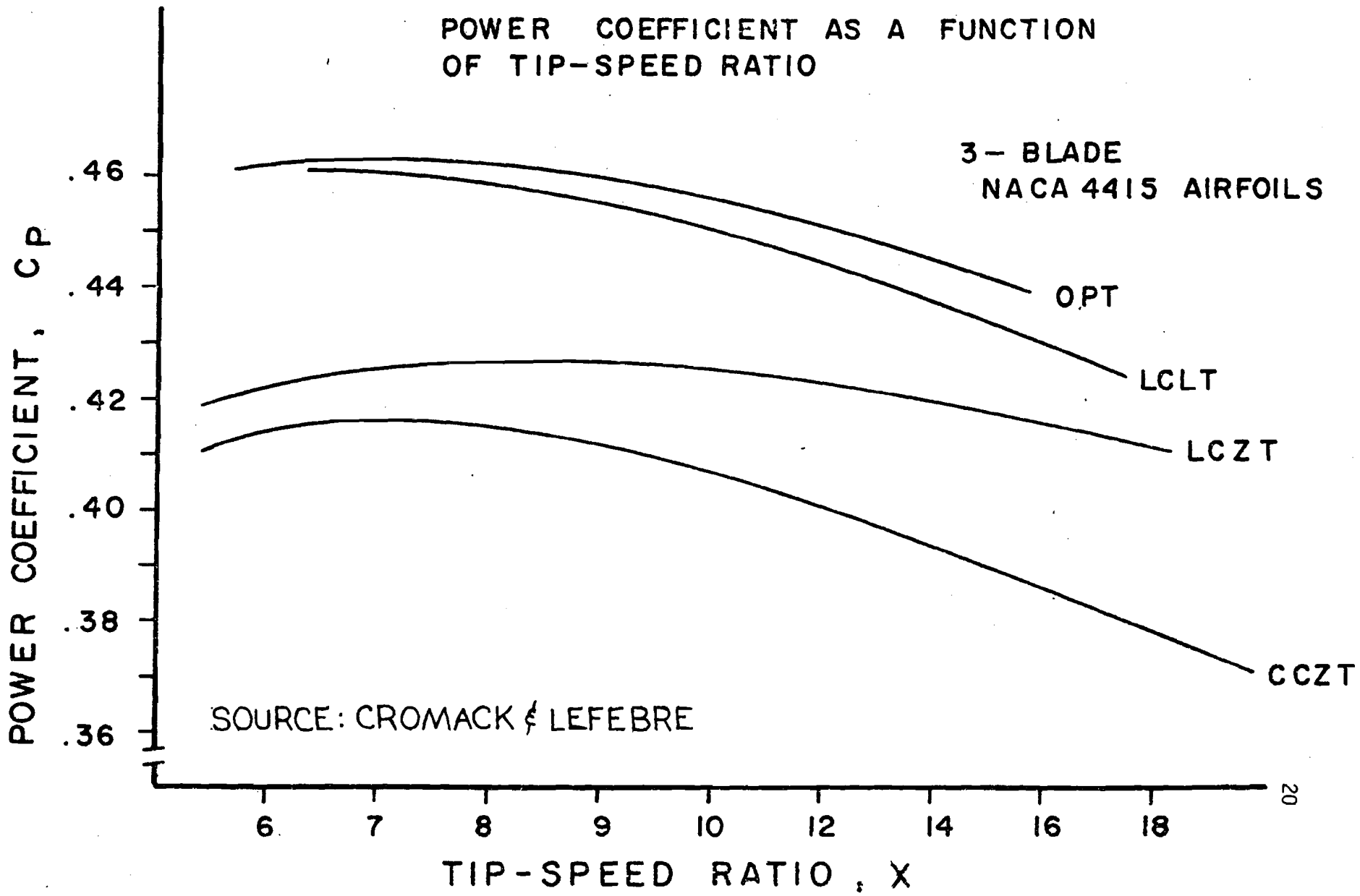

FIGURE 1.4.2

POWER COEFFICIENT AS A FUNCTION OF TIP SPEED RATIO

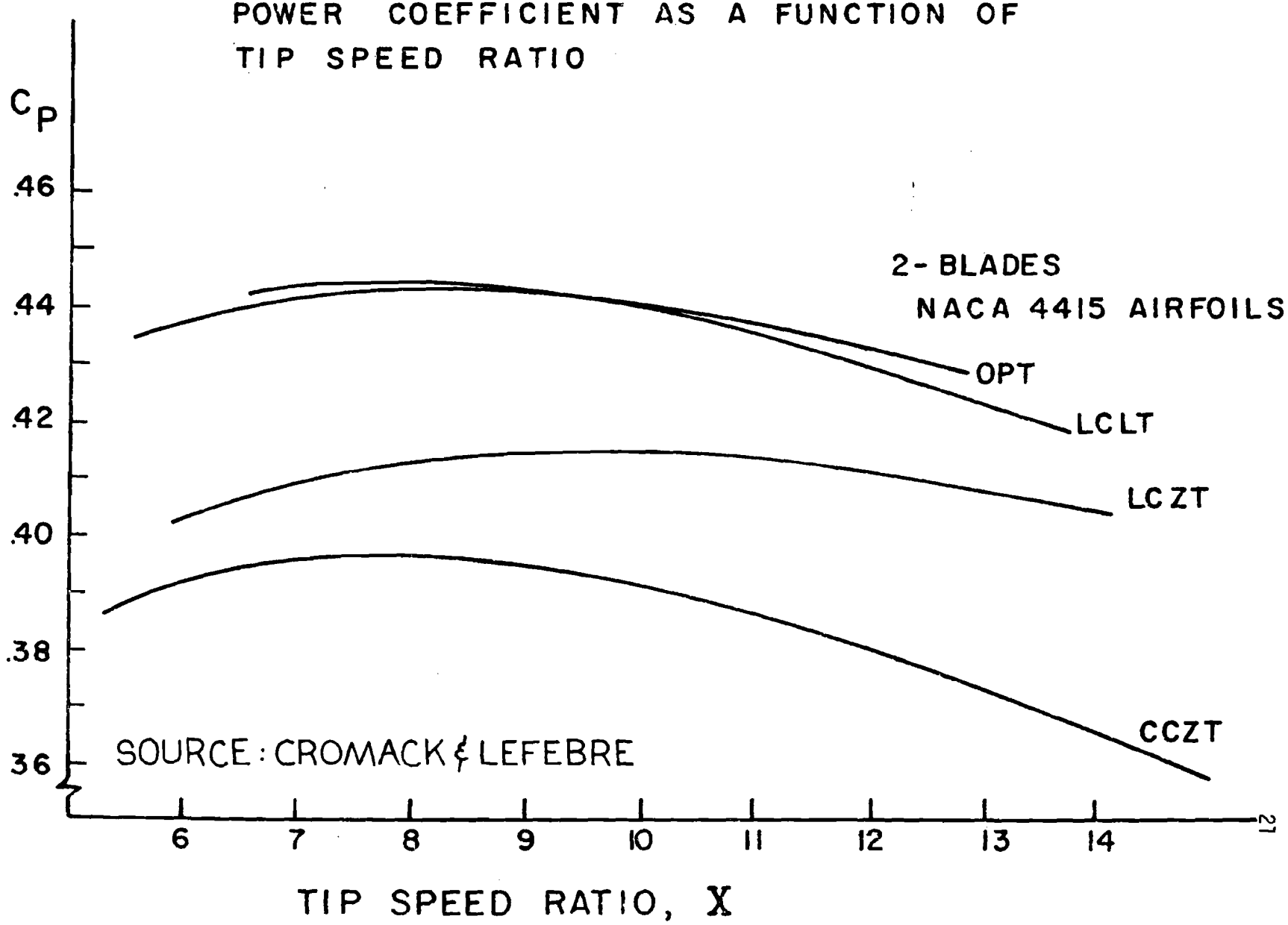

clear that trade-offs exist between cost of manufacturing and maximum power production. However, this subject will not be dealt with at this point. The nomenclature of Figures 1.4.1 and 1.4.2 include these abbreviations:

OPT = Optimum

LCLT = Linear Cord Linear Taper

LCZT = Linear Cord Zero Taper

CCZT = Constant Cord Zero Taper

If a linear cord linear twist blade were to be used with three blades, one might expect a power coefficient of .454 at a tip speed ratio of 7. If one were to select two blades, the power coefficient would drop to .435. This, of course, represents another trade-off.

If a cut-in wind speed of 5 mph, a rated wind speed of 20 mph, and a cut-out wind speed of 50 mph were selected, it is an easy task to synthesize a velocity duration curve for a site, then calculate the useable raw energy produced during rated conditions for a year. It is expressed as:

$$KW\text{-}HR/YR = C\pi Cp\tfrac{1}{2}\ R^2 Vr^3 \int_{Tco}^{TR} dt$$

Where:

CT = Constant

V_R = Wind Velocity Rated

TR = Number of Hours V_R is Exceeded in One Year

TCO = Number of Hours Velocity Cut-Out is Exceeded in One Year

To calculate the energy produced from cut-in to rated, a power duration curve is produced. Integration of the area under that curve yields annual productivity raw energy. Numerical integration becomes necessary here but is programmed with relative ease using the Simpson's or the Trapezoidal rule. Using the Trapezoidal rule, it is expressed as:

$$\sum_{X = CIV}^{RV-1} \left[\frac{CCp\tfrac{1}{2}\rho\pi R^2 (V_X + V_X - 1)^3}{2} \right] \left\{ 8760 \left[-\left(\frac{V_X+1}{C}\right) - EXP-\left(\frac{Vx}{C}\right)^K \right] \right\}$$

RV = Rated Wind Velocity

CIV = Cut-in Wind Velocity

It must be noted that this method takes into account wind wheel diameter, operating procedure, i.e., cut-in, rated, and cut-out wind speeds, as well as blade geometry, tip speed ratio, and number of blades which influence the power coefficient. Power duration curves and plant factor at the Alabama and Virginia sites are shown in Figures 1.4.3 and 1.4.4. The plant factor is expressed as:

$$PF = \frac{\text{Actual Useful Output}}{\text{Output if Running at Rated Power All Year}}$$

Table 1.4.1 shows the mean wind speed and standard deviation for various locations in the United States. This information enables one to calculate yearly productivity at each of these sites. Using

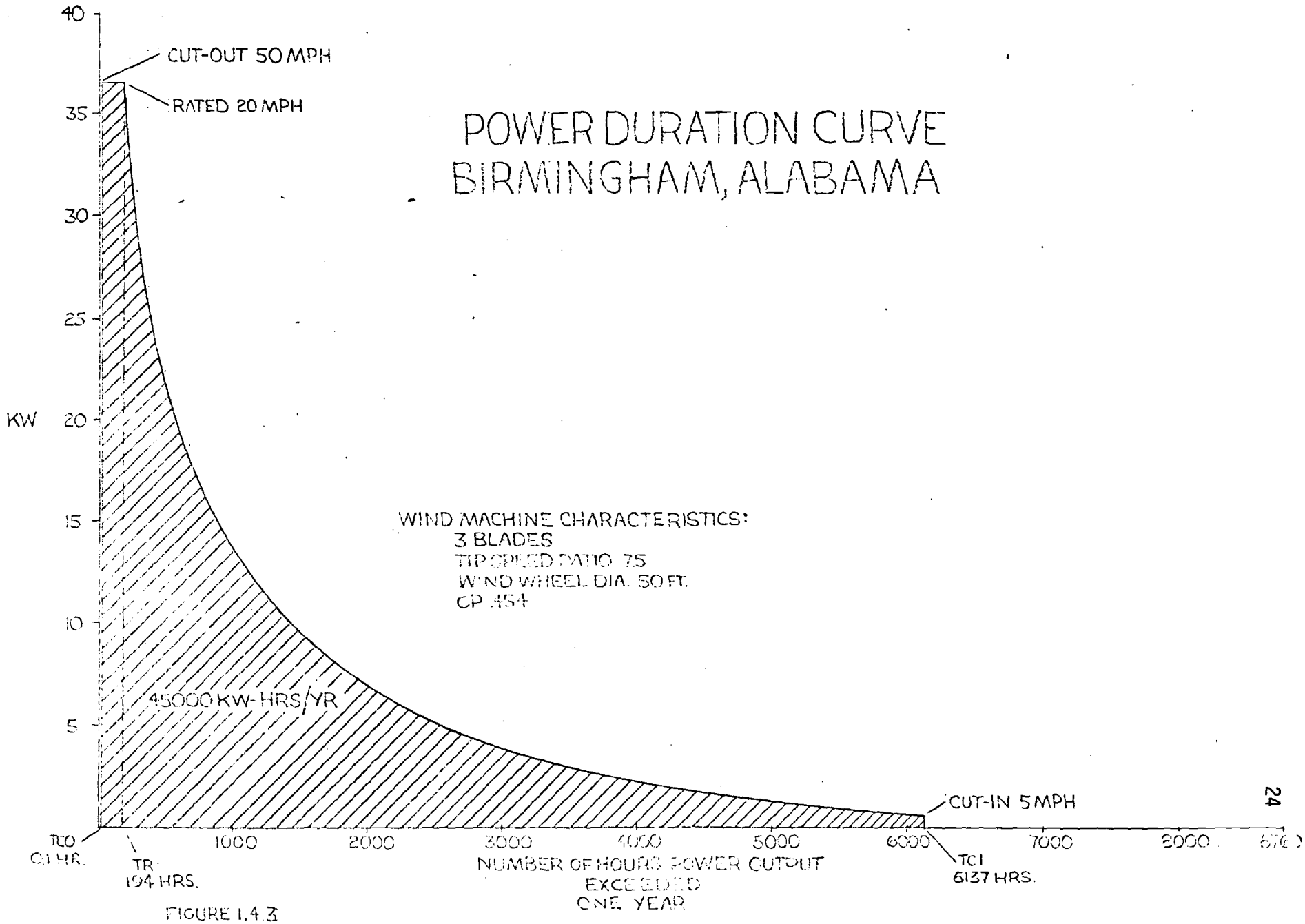
POWER DURATION CURVE
BIRMINGHAM, ALABAMA
CUT-OUT 50 MPH
RATED 20 MPH
KW
40
35
30
25
20
15
10
5
WIND MACHINE CHARACTERISTICS:
3 BLADES
TIP SPEED RATIO 7.5
WIND WHEEL DIA. 50 FT.
CP .454
45000 KW-HRS/YR
CUT-IN 5 MPH
TCO
0.1 HR.
TR
194 HRS.
1000
2000
3000
4000
5000
6000
7000
8000
TCI
6137 HRS.
NUMBER OF HOURS POWER OUTPUT
EXCEEDED
ONE YEAR

FIGURE 1.4.3

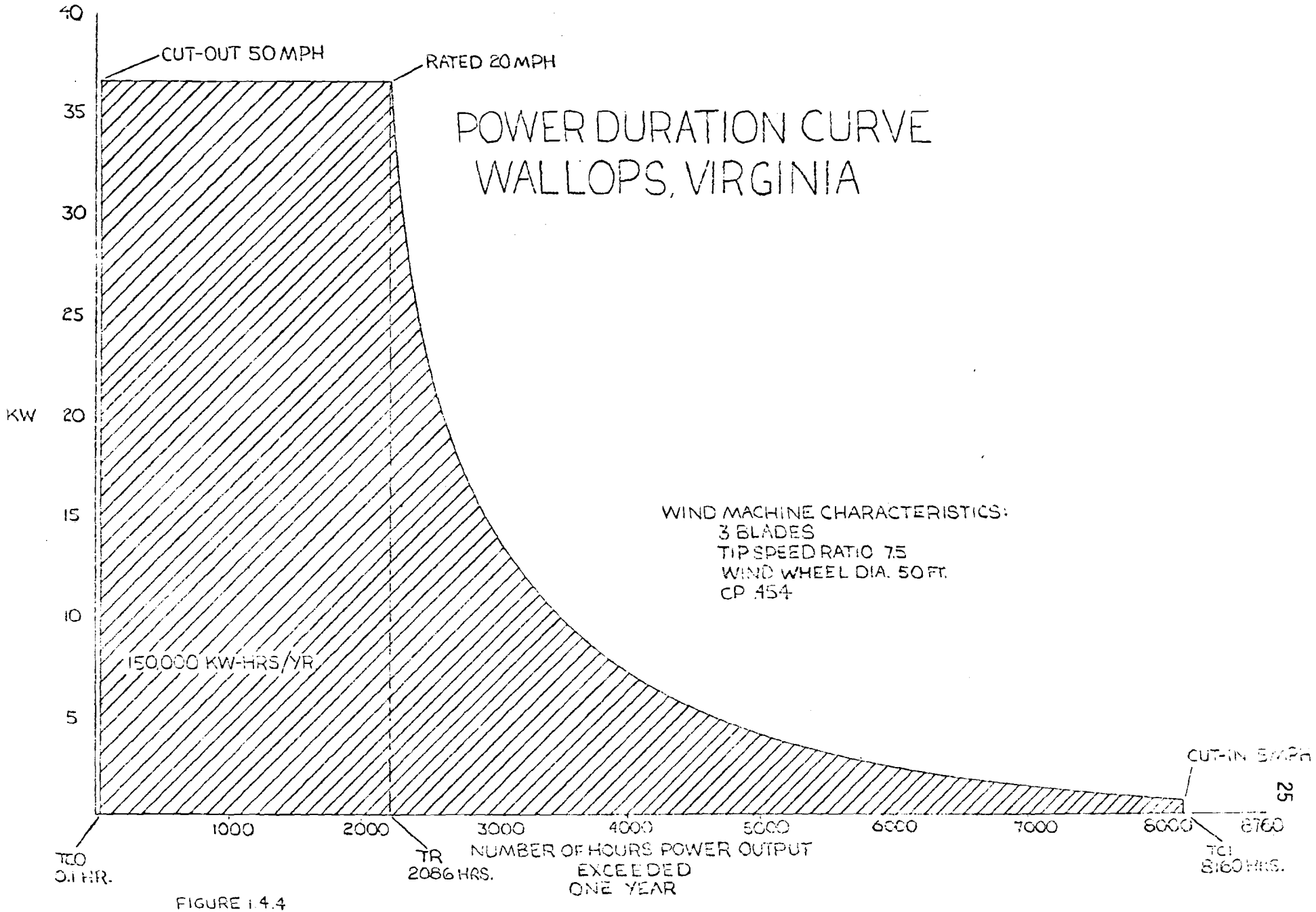
POWER DURATION CURVE
WALLOPS, VIRGINIA
CUT-OUT 50 MPH
RATED 20 MPH
KW
40
35
30
25
20
15
10
5
150,000 KW-HRS/YR
WIND MACHINE CHARACTERISTICS:
3 BLADES
TIP SPEED RATIO 7.5
WIND WHEEL DIA. 50 FT.
CP .454
CUT-IN 5 MPH
1000
2000
3000
4000
5000
6000
7000
8000
8760
TCO
0.1 HR.
TR
2086 HRS.
NUMBER OF HOURS POWER OUTPUT
EXCEEDED
ONE YEAR
TCI
8160 HRS.

FIGURE 1.4.4

TABLE 1.4.1

ANNUAL MEAN WIND SPEED AND STANDARD DEVIATION CHART

Location	Mean Wind Speed $\overline{V}$ (mph)	Standard Deviation (mph)	$\sigma/\overline{v}$
Birmingham, AL	8.16	4.94	.605
Pheonix, AR	5.15	1.93	.375
Bakersfield, CA	5.31	2.12	.399
Denver, CO	8.91	6.45	.724
Hartford, CT	9.70	5.1	.523
Chicago, IL	9.96	5.2	.523
Des Moines, IO	11.33	5.92	.523
Wichita, KS	13.16	6.32	.48
Boston, MA	12.27	5.65	.461
St. Louis, MO	8.72	5.	.575
Providence, RI	4.21	1.6	.387
Wallops, VA	15.0	7.2	.48

program WIND (see appendix), a number of wind machines can be superimposed onto the sites, the Weibull K's and C's calculated, as well as each machine's productivity. The results are shown in Table 1.4.2 and 1.4.3 respectively. It was found that the cut-in wind velocity if at least 5 mph, had little or no effect on the annual productivity for any given wind machine at a given site. Granted, there are many hours in a year that the winds are gentle but there is also very little power in those gentle breezes. It is, therefore, not worth the effort and the cost to have a wind machine cut-in at a 2 or 3 mph wind speed. On the other hand, if one were to accept the 15 mph cut-in of the earlier Putnam, Golding and Hutter designs, one would harvest very little at Birmingham, and even less at Wallops. It was also found that extracting power at wind speeds in excess of 50 mph also had little effect on the productivity at these sites. There is a great deal of kinetic energy in the high winds, but they occur so infrequently during the year that it does not seem economical to have the wind machine operate at a high wind speed. Table 1.4.3 bears that out.

Figures 1.4.5 and 1.4.6 show the percent of seasonal sanitation hot water demand of a dairy farm with 100 cows in Madison, Wisconsin which could be provided by various diameter wind wheels at different rated wind speeds. It is clear that if all heating demands are to be met, one would have to select the 50-foot diameter wind wheel. This would meet 100% of the heating needs in the summer but during the winter, spring and fall, surpluses of over 80% are generated. If this

TABLE 1.4.2

ANNUAL WEIBULL C AND K CHART[4]

Location	Weibull C	Weibull K	Elevation of Anemometer (Ft.)
Birmingam, AL	9.15	1.71	63
Pheonix, AZ	5.77	1.29	18
Bakersfield, CA	5.97	1.33	20
Denver, CO	9.73	1.40	72
Hartford, CT	10.94	2.01	99
Chicago, IL	11.23	1.96	20
Des Moines, IO	12.77	1.96	66
Wichita, KS	14.85	2.18	29
Boston, MA	13.85	2.30	22
St. Louis, MO	9.8	1.83	82
Providence, RI	10.58	1.76	20
Wallops, VA	16.94	2.17	200

TABLE 1.4.3

PRODUCTIVITY TABLE

Location	Productivity kW-hrs/yr 5, 20, 50*	2, 20, 50**	5, 20, 80***
Birmingham, LA	29,070	29,270	29,070
Pheonix, AZ	12,475	12,768	12,475
Bakersfield, CA	12,135	12,430	12,135
Denver, CO	40,135	40,300	40,135
Hartford, CT	40,750	40,890	40,750
Chicago, IL	44,000	44,130	44,000
Des Moines, IO	58,460	58,560	58,460
Wichita, KS	77,440	77,500	77,440
Boston, MA	67,220	67,290	67,220
St. Louis, MO	32,780	32,950	32,780
Providence, RI	40,530	40,700	40,530
Wallops, VA	96,030	96,090	96,040

*Where:

5 = cut-in (mph)

20 = rated (mph)

50 = furling (mph)

**Where:

2 = cut-in (mph)

20 = rated (mph)

50 = furling (mph)

***Where:

5 = cut-in (mph)

20 = rated (mph)

80 = furling (mph)

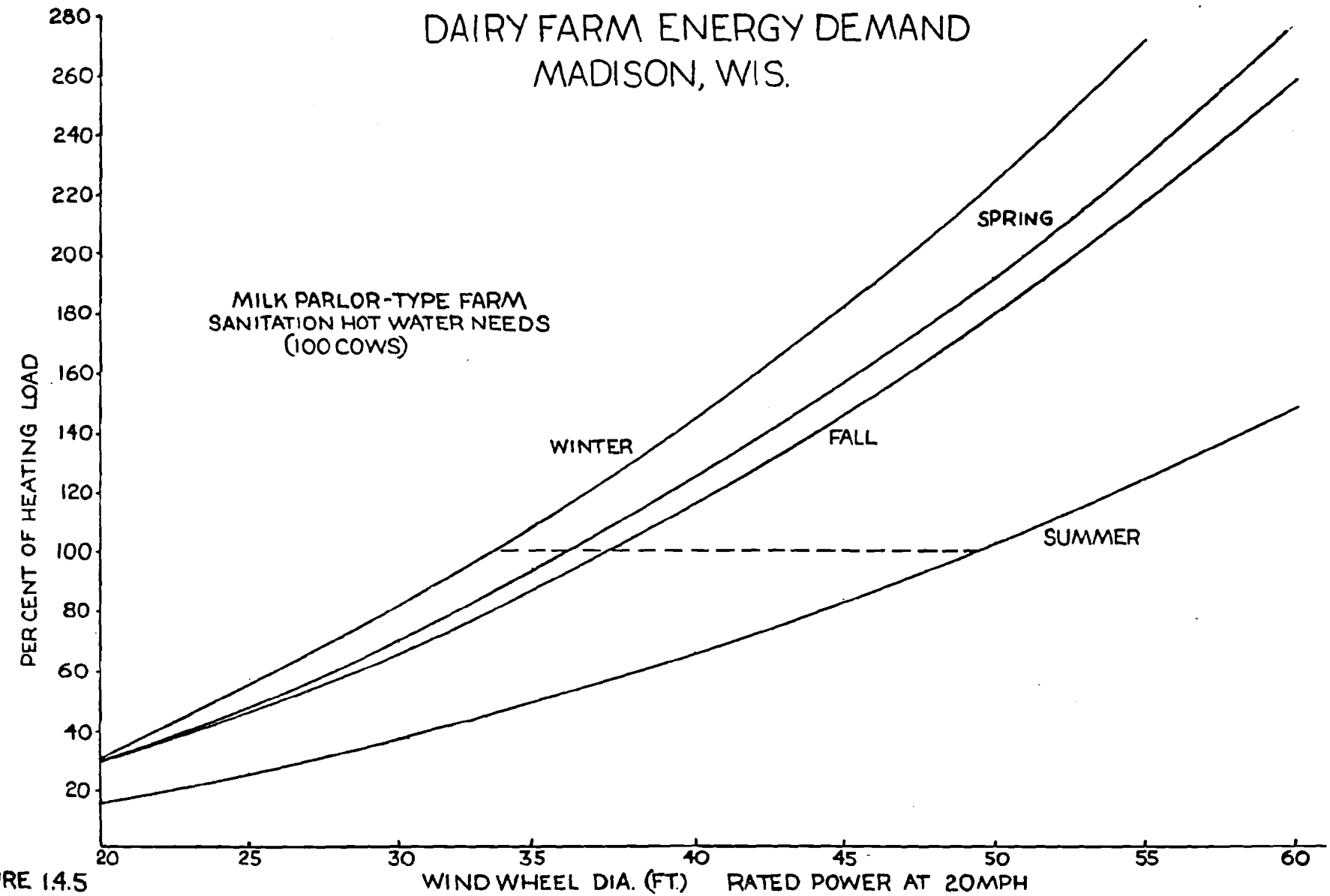
DAIRY FARM ENERGY DEMAND
MADISON, WIS.
MILK PARLOR-TYPE FARM
SANITATION HOT WATER NEEDS
(100 COWS)
SPRING
WINTER
FALL
SUMMER
PER CENT OF HEATING LOAD
280
260
240
220
200
180
160
140
120
100
80
60
40
20
20
25
30
35
40
45
50
55
60
WIND WHEEL DIA. (FT.) RATED POWER AT 20MPH

FIGURE 1.4.5

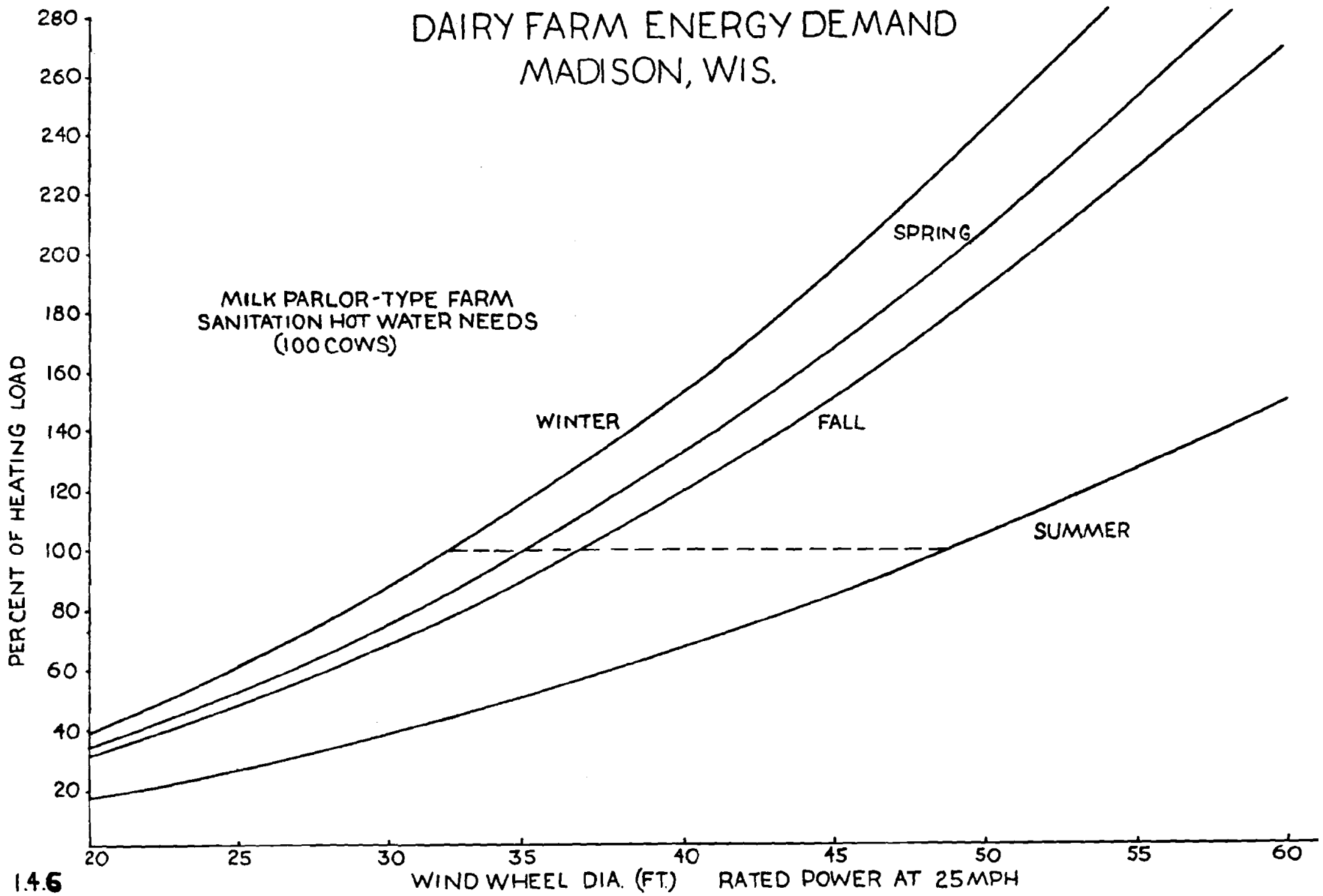
DAIRY FARM ENERGY DEMAND
MADISON, WIS.
MILK PARLOR-TYPE FARM
SANITATION HOT WATER NEEDS
(100 COWS)
WINTER
SPRING
FALL
SUMMER
PERCENT OF HEATING LOAD
280
260
240
220
200
180
160
140
120
100
80
60
40
20
20
25
30
35
40
45
50
55
60
WIND WHEEL DIA. (FT.) RATED POWER AT 25 MPH

FIGURE 1.4.6

energy is used just for sanitation water heating purposes, the surplus generated would have to be considered wasted heat. The total energy demand for sanitation purposes is 33,000 kw-hr/year. The current (1978) price for a kw-hr of heating electricity in this region is 27 mills. Therefore, the crudest possible estimate of the "value" of the energy that could be delivered by a 50-foot diameter wind machine in 20 years with no escalation of electricity price at 27 mills/kwhr would be 660,000 kw-hrs at a cost of $17,820. This crudely represents the break-even price of a 50-foot diameter machine with a 20-year life. There are, however, possible uses for the surplus heat such as partial heating of the farm house. Auxiliary heat would, of course, be necessary to supplement the wind system. If this were the case, almost all energy produced by the wind system would be utilized with the exception of the spring production (see Figure 1.4.7). In this case, the usable energy delivered by the wind machine is increased to 51,429 kw-hrs per year. Again, if the wind machine were in operation for 20 years, the break-even cost would be $27,772. It is clear at this point that the relative cost of a wind system is closely tied to the wind regime, the price of electricity in the region under consideration, and the type of demand. Of course, there are many variations to this theme. The cost effectiveness of a 20-foot diameter wind system may appear to be much better than the 50-foot diameter wind system, but the annual productivity of the system would be so small in comparison to the demands of the dairy farm under consideration as to make it of little practical use. In other situations the use of a 20-foot

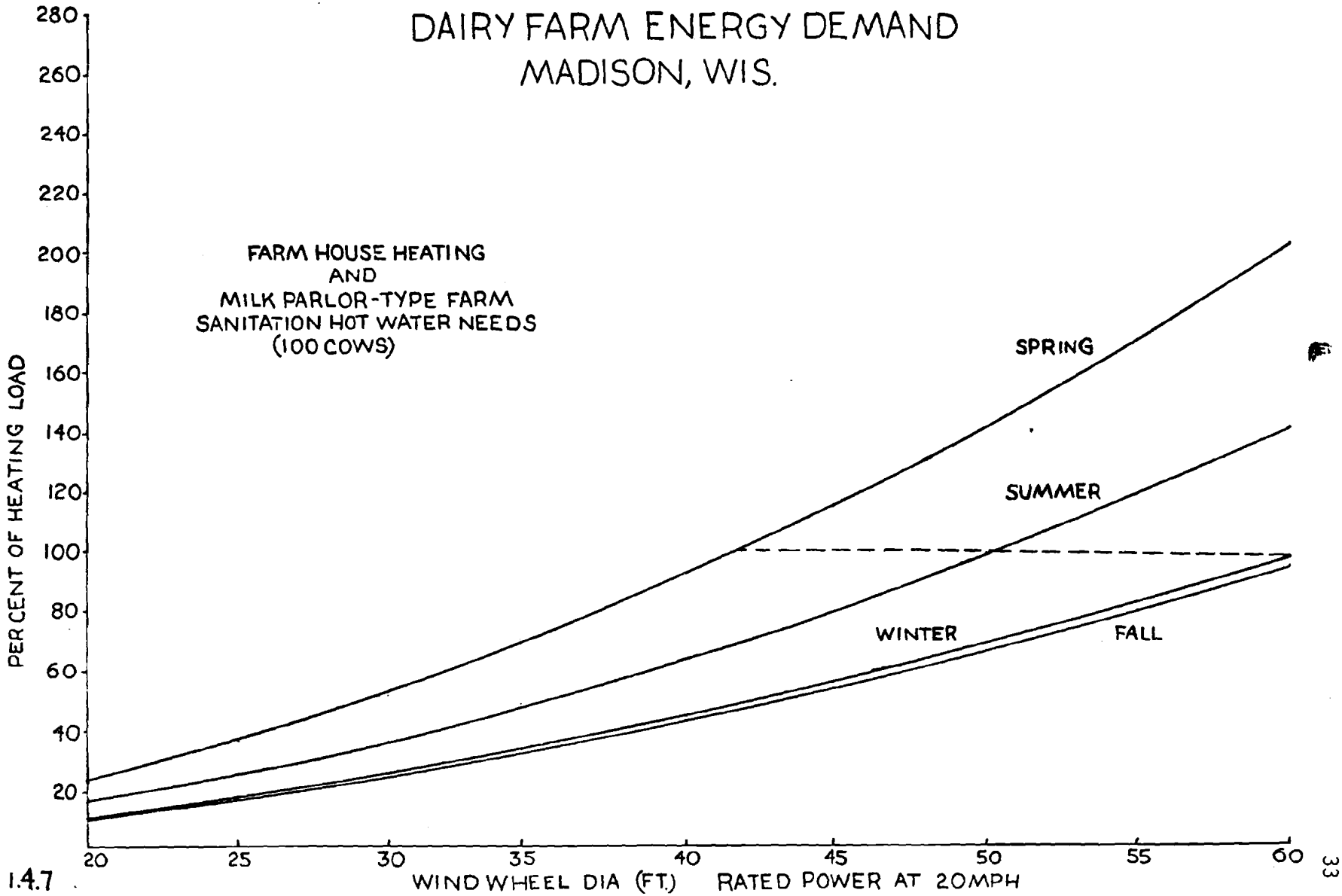
DAIRY FARM ENERGY DEMAND
MADISON, WIS.
FARM HOUSE HEATING
AND
MILK PARLOR-TYPE FARM
SANITATION HOT WATER NEEDS
(100 COWS)
SPRING
SUMMER
WINTER
FALL
PER CENT OF HEATING LOAD
280
260
240
220
200
180
160
140
120
100
80
60
40
20
20
25
30
35
40
45
50
55
60
WIND WHEEL DIA (FT.) RATED POWER AT 20MPH

FIGURE 1.4.7

diameter wind system would be cost effective and meet the needs of that situation. Included here are Figures 1.4.8, 1.4.9, and 1.4.10 showing the break-even costs for various machines at various sites. It must be noted that the break-even costs presented here are by no means the final answer (in fact, they are ultra-conservative because they fail to admit to any escalation with time in the cost of electricity). They are only meant to serve as guidelines for the Chapters on design that follow. It is felt that if the cost of a design were to be above the break-even cost, one might have reason to believe that a wind system for the particular application under consideration would not be cost effective, but on the other hand, if the cost is below the break-even point, one might feel that wind power is a good choice. A more detailed study will be presented in Part III on Economics where interest rates and the increasing cost of electricity will be taken into account.

Conclusion

The preceeding Chapters were an attempt to develop the necessary tools to enable one to have a good understanding of the design of a wind system. It is the author's opinion that the Weibull distribution method is the best technique available today to evaluate the productivity of a wind system at a site. The momentum theory is very straight forward and gives the designer the necessary information to size many of the components of the wind system under investigation.

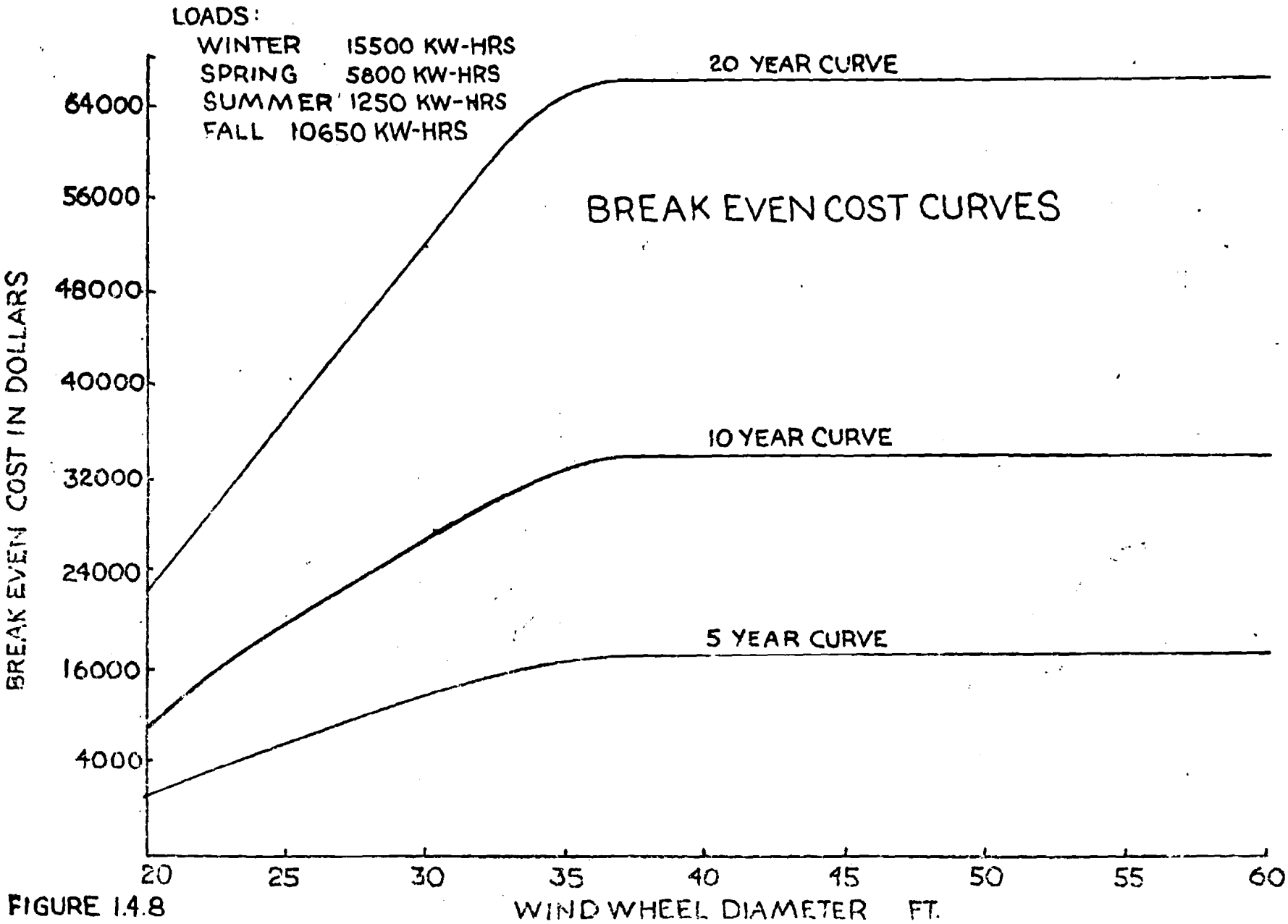
BOSTON, MA.
RESIDENTIAL HOME HEATING
LOADS:
WINTER 15500 KW-HRS
SPRING 5800 KW-HRS
SUMMER 1250 KW-HRS
FALL 10650 KW-HRS
20 YEAR CURVE
BREAK EVEN COST CURVES
10 YEAR CURVE
5 YEAR CURVE
BREAK EVEN COST IN DOLLARS
64000
56000
48000
40000
32000
24000
16000
4000
20
25
30
35
40
45
50
55
60
WIND WHEEL DIAMETER FT.

FIGURE 1.4.8

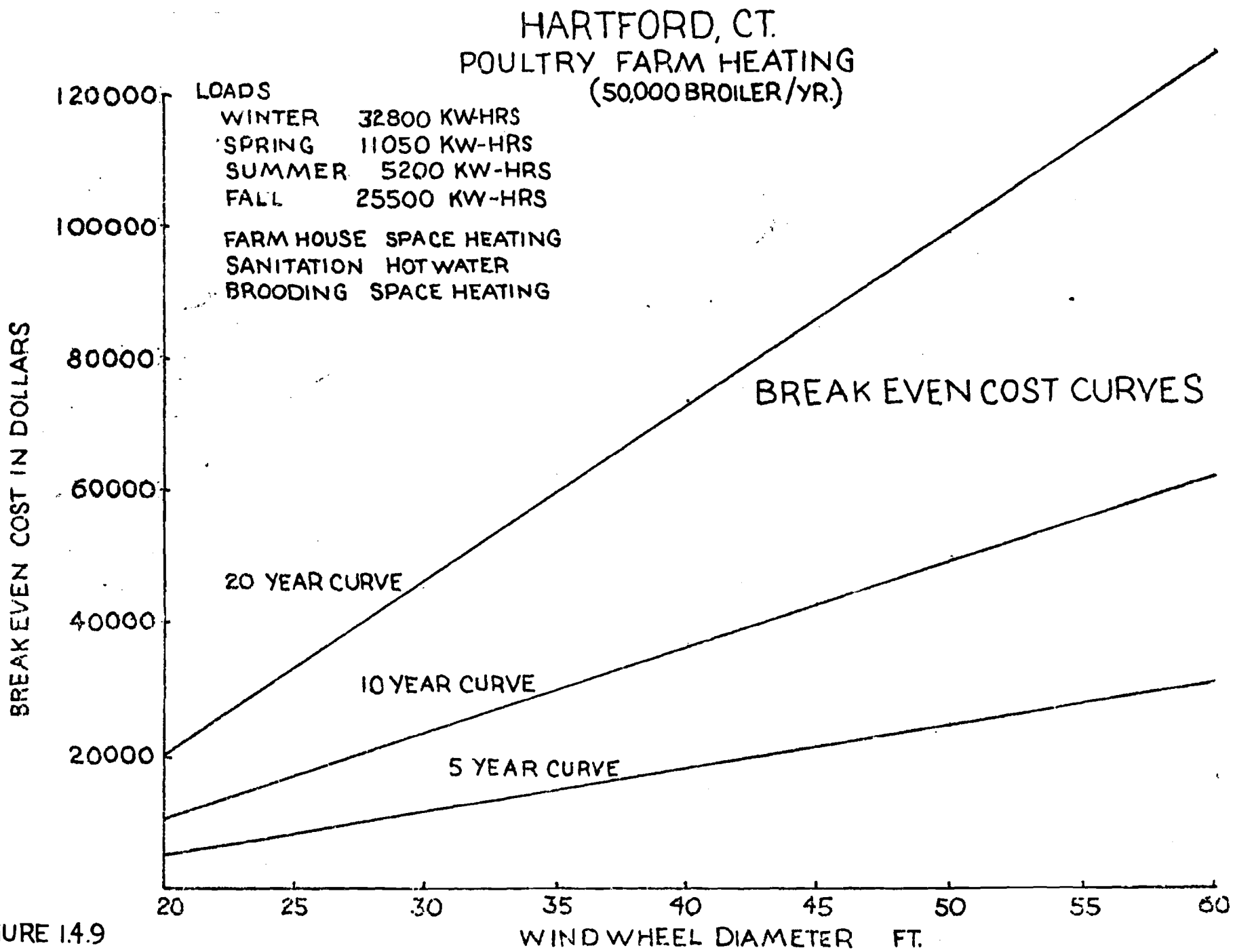
HARTFORD, CT.
POULTRY FARM HEATING
(50,000 BROILER/YR.)
LOADS
WINTER 32800 KW-HRS
SPRING 11050 KW-HRS
SUMMER 5200 KW-HRS
FALL 25500 KW-HRS
FARM HOUSE SPACE HEATING
SANITATION HOT WATER
BROODING SPACE HEATING
BREAK EVEN COST CURVES
20 YEAR CURVE
10 YEAR CURVE
5 YEAR CURVE
BREAK EVEN COST IN DOLLARS
120000
100000
80000
60000
40000
20000
20
25
30
35
40
45
50
55
60
WIND WHEEL DIAMETER FT.

FIGURE 1.4.9

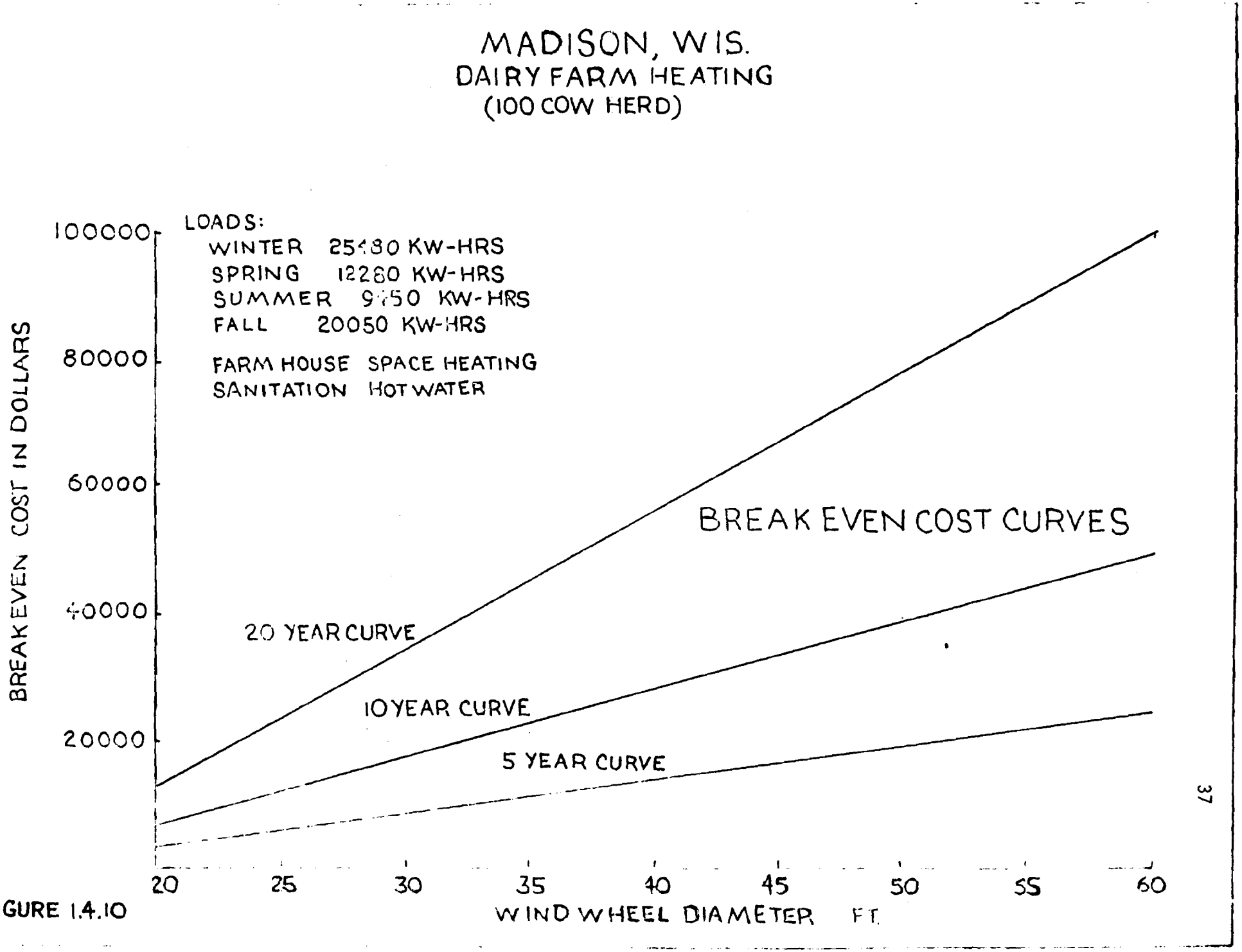
MADISON, WIS.
DAIRY FARM HEATING
(100 COW HERD)
LOADS:
WINTER 25480 KW-HRS
SPRING 12280 KW-HRS
SUMMER 9750 KW-HRS
FALL 20050 KW-HRS
FARM HOUSE SPACE HEATING
SANITATION HOT WATER
BREAK EVEN COST CURVES
20 YEAR CURVE
10 YEAR CURVE
5 YEAR CURVE
BREAK EVEN COST IN DOLLARS
100000
80000
60000
40000
20000
20
25
30
35
40
45
50
55
60
WIND WHEEL DIAMETER FT.

FIGURE 1.4.10

PART II - SYSTEM DESIGN

PART II

CHAPTER I - INTRODUCTION

The purpose of this investigation is not to design every conceivable wind system configuration; it would be far too lengthy and inappropriate. Horizontal axis high-speed propeller type, downwind, continually pitching 2 or 3 bladed wind wheels operating at tip speed ratios between 7 and 8 will be investigated in this paper. These characteristics are based on the successful experience gained from the UMass Wind Furnace I. It is felt that although the investigation is limited to a particular wind system configuration, the general design methodology presented could be used to design any wind system. For example, once the application is identified, the wind wheel diameter is immediately set for any given rated wind speed. Figures 2.1.1 and 2.1.2 are based on rated wind speeds of 20, 25, and 30 mph. Little is gained with rated wind speeds above 30 mph for reasons covered in Part I. It must be noted that the results gained from Figures 2.1.1 and 2.1.2 represent the power delivered to the wind shaft by the wind wheel. It does not take into account the overall efficiencies of the system. For example, if it was determined that a 2-bladed wind system rated at 25 mph is to be used to drive a 25 kw generator at 1800 rpm with a roller chain speed-up transmission, three stages would be required. It is common practice to assume 97% efficiency for each stage, if roller chain or gears are used. If chains were used as suggested in the above example, the efficiency would be $(0.97)^3$ for the speed-up

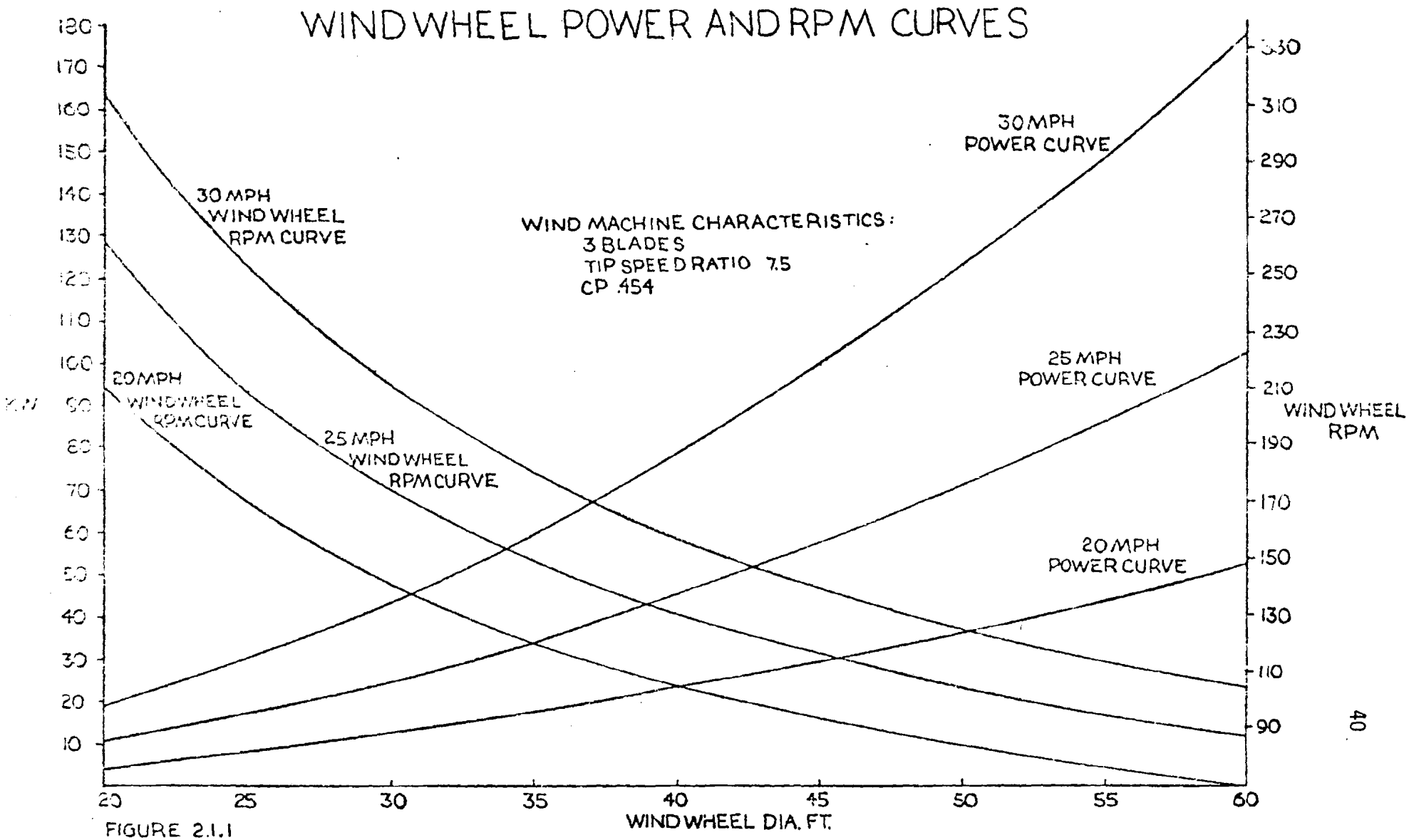
WINDWHEEL POWER AND RPM CURVES
30 MPH WIND WHEEL RPM CURVE
20 MPH WINDWHEEL RPM CURVE
25 MPH WIND WHEEL RPM CURVE
WIND MACHINE CHARACTERISTICS:
3 BLADES
TIP SPEED RATIO 7.5
CP .454
30 MPH POWER CURVE
25 MPH POWER CURVE
20 MPH POWER CURVE
WIND WHEEL RPM
WINDWHEEL DIA. FT.
KW
20
25
30
35
40
45
50
55
60
10
20
30
40
50
60
70
80
90
100
110
120
130
140
150
160
170
180
90
110
130
150
170
190
210
230
250
270
290
310
330

FIGURE 2.1.1

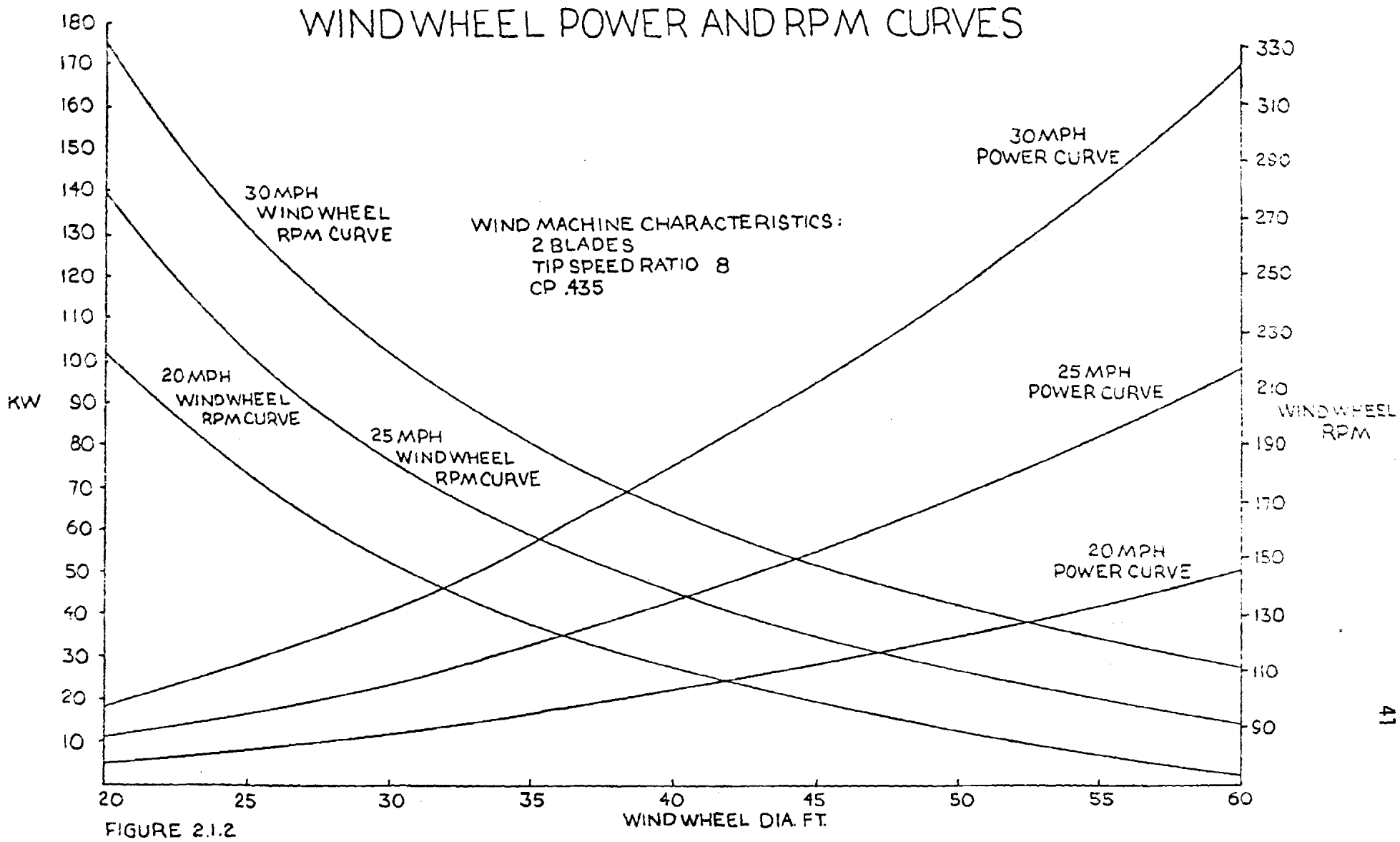
WINDWHEEL POWER AND RPM CURVES
KW
180
170
160
150
140
130
120
110
100
90
80
70
60
50
40
30
20
10
330
310
290
270
250
230
210
190
170
150
130
110
90
WINDWHEEL RPM
30 MPH WINDWHEEL RPM CURVE
20 MPH WINDWHEEL RPM CURVE
25 MPH WINDWHEEL RPM CURVE
WIND MACHINE CHARACTERISTICS:
2 BLADES
TIP SPEED RATIO 8
CP .435
30 MPH POWER CURVE
25 MPH POWER CURVE
20 MPH POWER CURVE
20
25
30
35
40
45
50
55
60
WINDWHEEL DIA. FT.

FIGURE 2.1.2

transmission. It is also common practice to assume an efficiency of 90% for most electric generators. Therefore, the overall efficiency of the system would be $(.97)^3(90)$. This would mean the wind wheel would be required to deliver 25kw/(.82) at rated conditions, or more generally:

$$\text{required wind wheel input} = \frac{\text{required output at rated conditions}}{\text{overall efficiency}} = \frac{25\text{kw}}{.82} = 31 \text{ kw}$$

Using Figure 2.1.2 for the example under consideration, the wind wheel diameter would be 34 feet if rated at 25 mph. The wind wheel rpm can be determined from Figure 2.1.2 by finding the intersection of the wind wheel diameter (34 feet) and the wind wheel rpm curve (25 mph), then reading rpm from the right hand side of the graph. In this case, the wind wheel rpm is 164. This gives the designer the overall speed-up ratio for the transmission. In this example it would be 1800/164 or 11:1. Each stage would have a speed-up ratio of approximately 2.22:1 or any other variation of the overall ratio in three stages in this case.

This report will investigate two systems; one, a wind turbine generator delivering 240 or 480 volts at 60hz, 3 phase (WTGE) and the other developing hot water by means of mechanical shaft power (WTGM). Each system will generate 40 kw at a wind speed of 25 mph. Referring to Figures 2.1.1 and 2.1.2 will reveal the wind wheel diameters of the two systems will be in excess of 35 feet. An attempt will be

made to develop the WTG40E and WTG40M concurrently so as to share common parts to maximize cost-effectiveness.

CHAPTER II - TYPES OF ENERGY CONVERTERS

The Water Twister

James Prescott Joule, a British physicist, conducted an experiment in the mid-nineteenth century to illustrate the conservation of energy. Joule showed that mechanical energy could be equated to heat. In his famous experiment, he connected a weight to a string around a storage spool, driving a paddle wheel immersed in a beaker of water. When the weight was dropped a known distance, the paddle wheel agitated the water, thus raising the water temperature proportionately. Shaft horsepower equals 100% of the thermal energy increase.

The All American Engineering Company (AAE) has applied this principal to the arrestment of aircraft which, because of mechanical malfunctions or other unusual conditions, cannot otherwise stop at the end of the runway. The overrunning aircraft engages the cable, much in the same way as aircraft land on aircraft carriers. A nylon belt is pulled off the belt storage drum turning a paddle submersed in a fluid. "When an aircraft weighing 50,000 lbs. engages at 170 mph, the 50×10^6 ft-lbs of energy raises the 90 gallons of water in the 'Water Twister' on each side of the runway about 50°F in fifteen seconds."[5] The University of Massachusetts and All American Engineering envision a natural coupling of the "Water Twister" energy absorber to the wind turbine where hot water is the desired end product.

The University of Massachusetts is currently testing the performance of the All American Engineering model 14 as shown in Figure 2.2.1

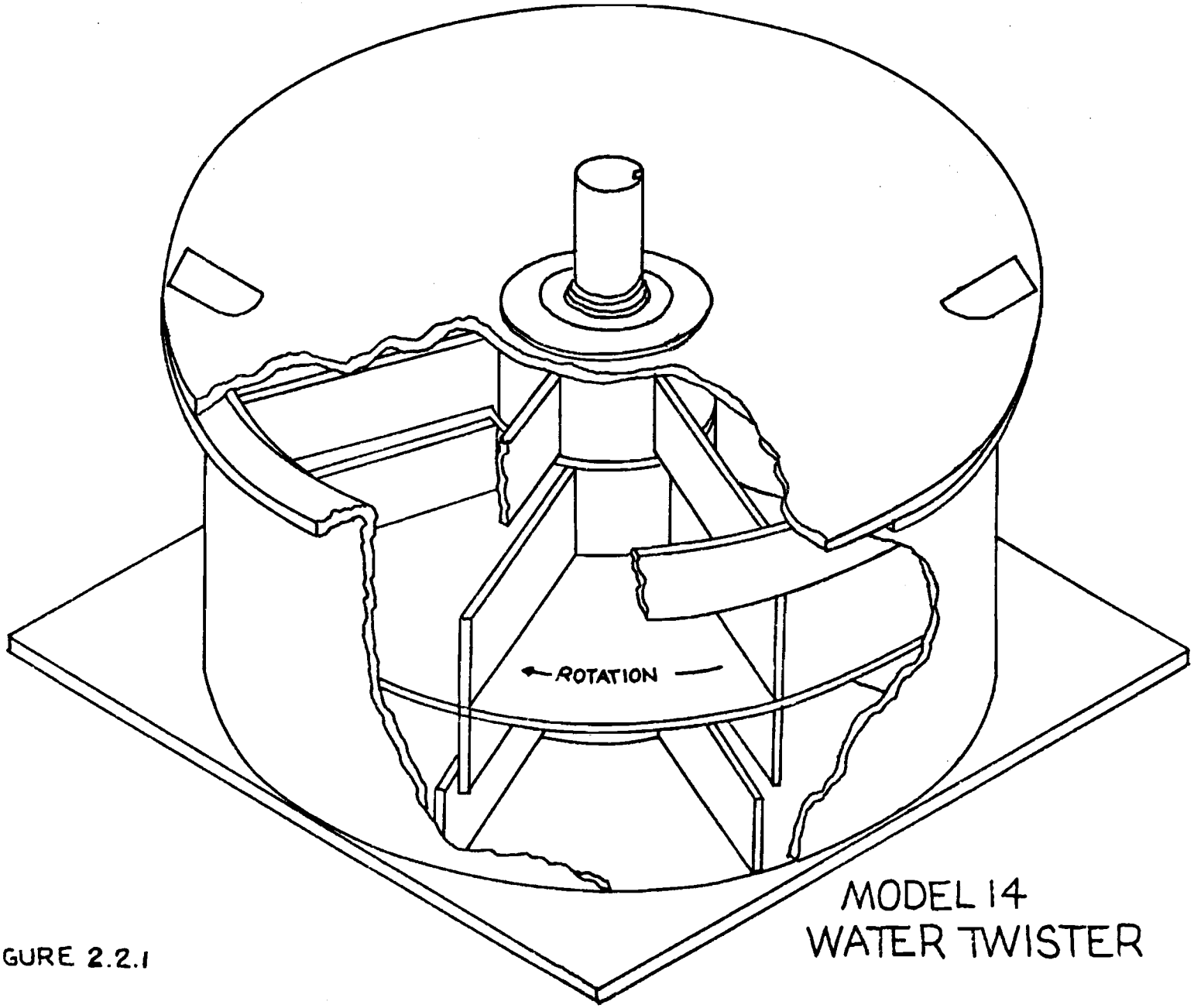

MODEL 14
WATER TWISTER

FIGURE 2.2.1

as related to wind systems. The initial results are shown in Figure 2.2.2. It can be seen from Figure 2.2.2 that power is related to the rpm^3 which is a natural match for a wind system where power is related to the wind speed V^3. Figure 2.2.3 shows the wind system and water twister curves as a function of wind speed. As shown in Figure 2.2.1, the model 14 water twister develops 40kw at 750 rpm. As stated previously, the wind wheel diameter will be in excess of 35 feet. It is felt, therefore, when dealing with diameters in this range that two-bladed wind wheels would be more cost effective than three. It can be seen from Figure 2.1.2 that the approximate wind wheel rpm will be 140. This represents an overall speed ratio of approximately 5.35 and a two-stage speed-up transmission, resulting in an overall efficiency of 0.94 for roller chains. The efficiency of the water twister was included in the test results as shown in Figure 2.2.1. This curve represents power out of the water twister.

$$\frac{40kw}{.94} = 43kw = 57(hp)$$

Now going back to Figure 2.2.1, the wind wheel diameter is shown to be 39.5 feet and the wind wheel rpm is 142 for a rated wind speed of 25 mph. The overall speed ratio is therefore 5.28, but the overall efficiency remains the same.

Generator

This investigation will deal solely with the single output

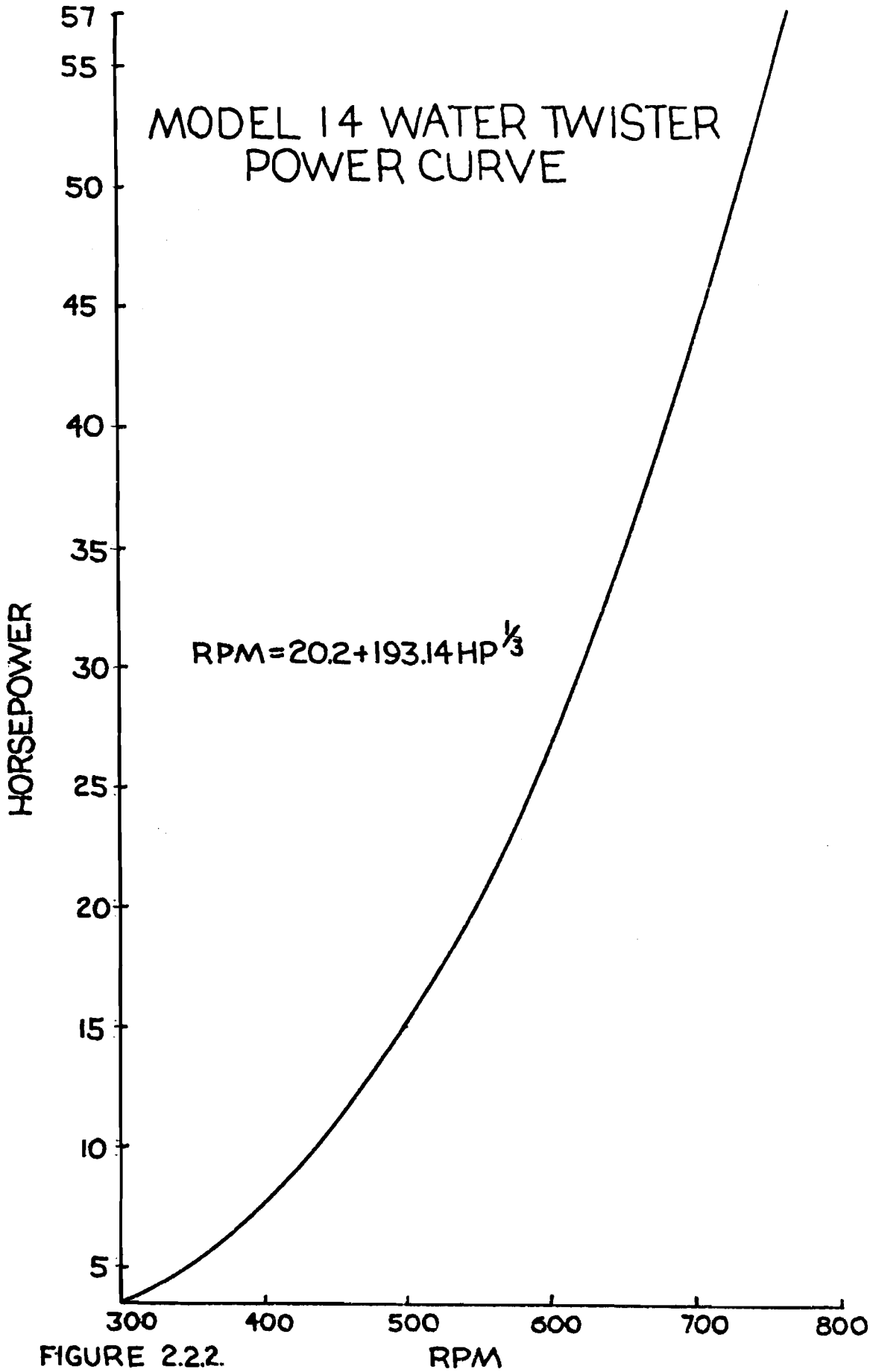
MODEL 14 WATER TWISTER
POWER CURVE
RPM=20.2+193.14HP^1/3
HORSEPOWER
57
55
50
45
40
35
30
25
20
15
10
5
300
400
500
600
700
800
RPM

FIGURE 2.2.2.

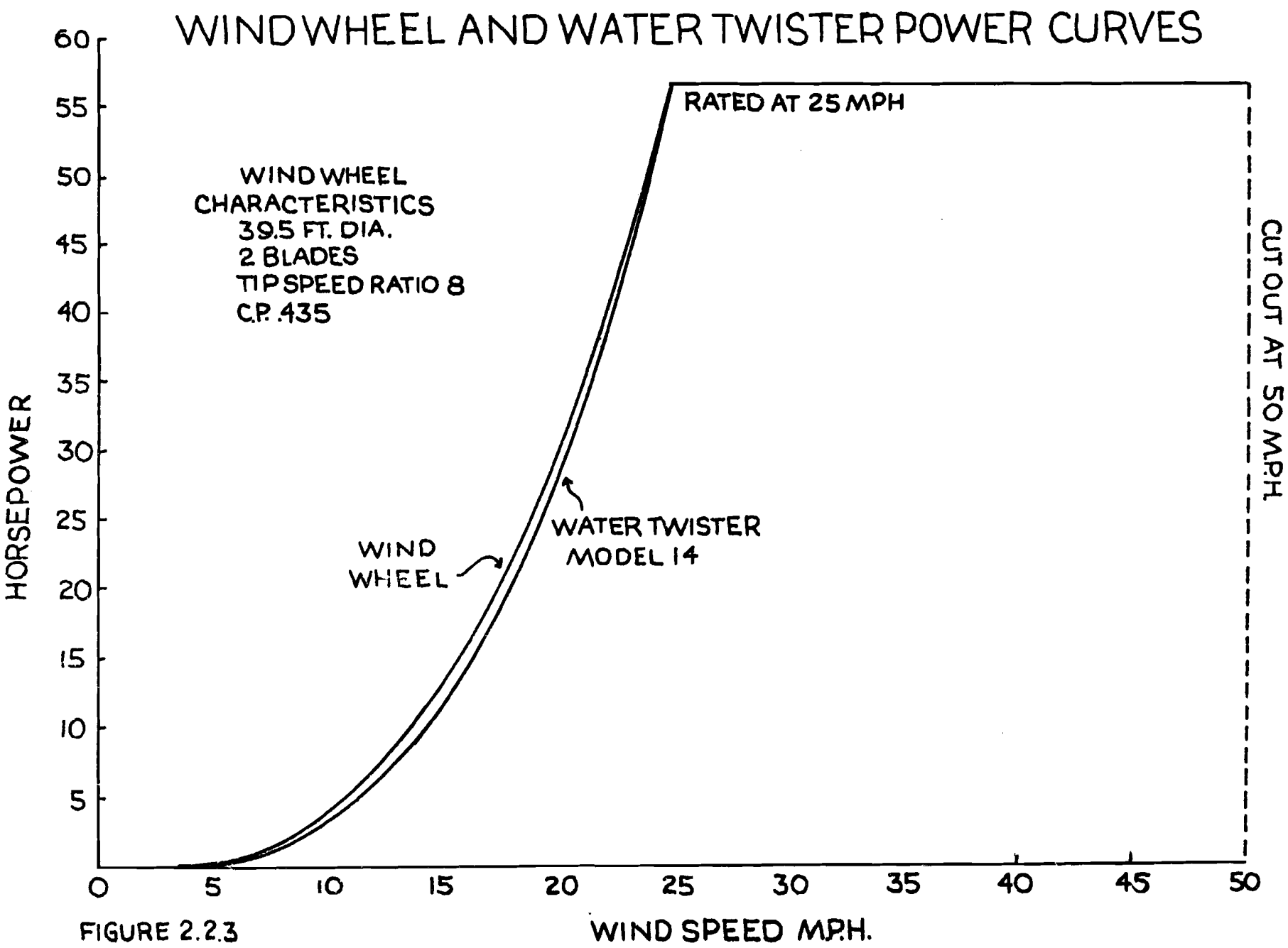
WINDWHEEL AND WATER TWISTER POWER CURVES
RATED AT 25 MPH
WINDWHEEL
CHARACTERISTICS
39.5 FT. DIA.
2 BLADES
TIP SPEED RATIO 8
C.P. .435
CUT OUT AT 50 M.P.H.
WATER TWISTER
MODEL 14
WIND
WHEEL
HORSEPOWER
60
55
50
45
40
35
30
25
20
15
10
5
0
5
10
15
20
25
30
35
40
45
50
WIND SPEED M.P.H.

FIGURE 2.2.3

induction generator (SOIG). This system will be designed to tie into an electricity grid. The SOIG has the potential of being very cost effective when tied into a self-contained multi-wheel wind heating or wind electricity system, a new utility, which must be provided with an adequate storage subsystem to be useful to society.

The single output induction generator (SOIG) shaft speed range must be held at a $\pm 7\%$ maximum variation from a base speed of 1900 rpm. The generator may be connected directly to the load via a circuit breaker and disconnect switch: stator only is connected. The load may be either a grid fed by a number of machines, or a one-wheel isolated system. Excitation and power factor correction require capacitors connected to the stator windings. The SOIG efficiency is 80%. The $\pm 7\%$ speed variation is accomplished with a hydrostatic transmission which will be discussed further in the next section on transmissions.

III. TRANSMISSIONS

At this point, two very different needs have been identified for the use of transmissions. The water twister (WTG40M) transmission is relatively simple in that it is merely a speed-up transmission with varying input from the wind wheel and a varying output being accepted by the water twister. The water twister is capable of absorbing the power from the wind wheel at any rpm and producing useful heat. Of course, at lower wind speeds the useful heat is small. The transmission for the single output induction generator is quite a bit more complex than that of the water twister. The transmission for the WTG40E must be capable, within a certain range, of maintaining an almost constant output rpm (±7%) with a varying input rpm from the wind, thereby making it possible to deliver 60hz, alternating current, or current adequately close to 60hz so that standard 60hz appliances can be used without modification or damage.

WTG40M Transmission

After some investigation three transmission candidates were identified: gear belt, roller chain, and silent chain. Gear drives are not included here because of their relative high cost. Figure 2.3.1 shows the horsepower capacity of the three transmission candidates under consideration. The prices of the drives shown in 2.3.1 are about the same. Table 2.3.1 compares the three systems with respect to peak horsepower, peak speed (FPM), relative horsepower per dollar, quietness, smoothness, flexibility, and compactness. Quietness is not as important to the wind mill designer as perhaps compactness and

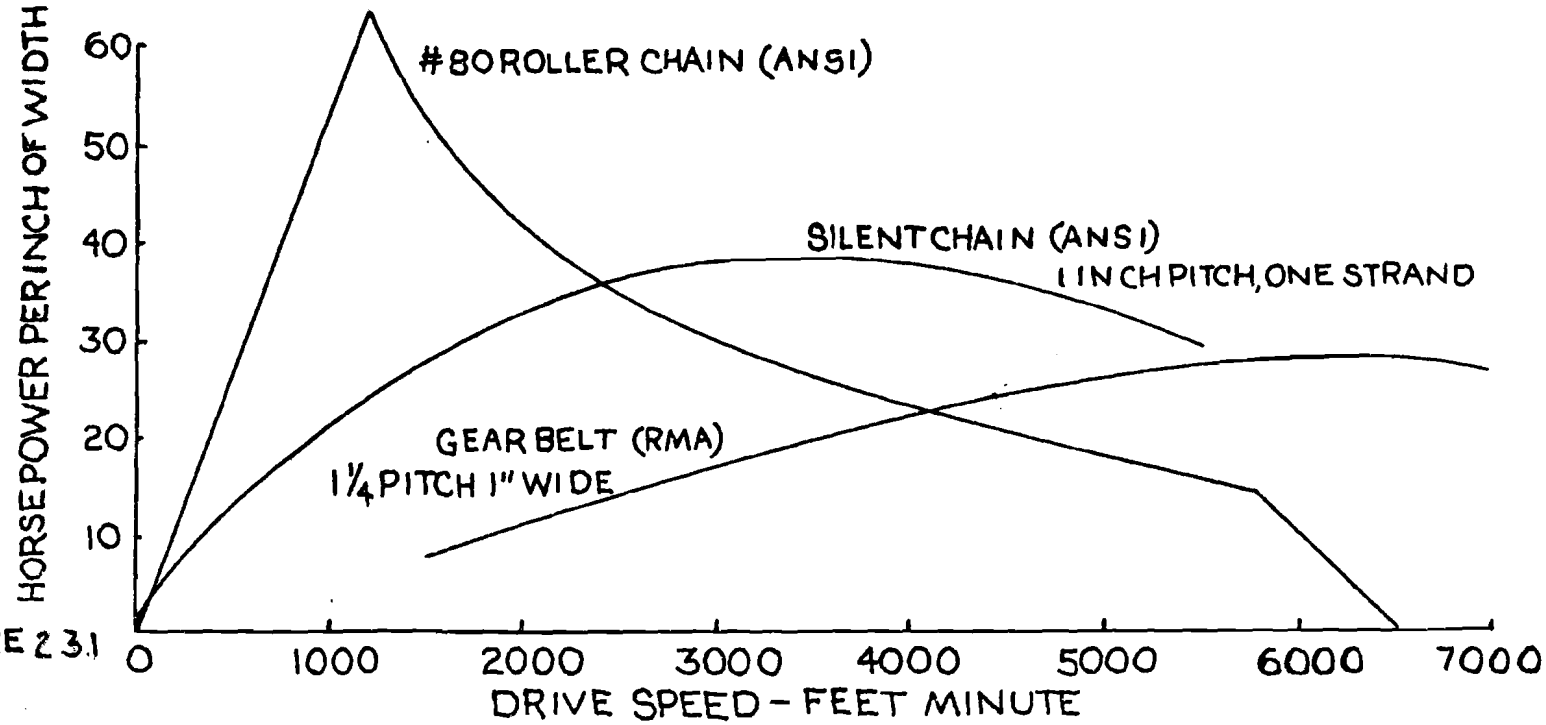

FIGURE 2.3.1

CHAIN OR BELT FROM ABOVE GRAPH	PEAK H.P. PER INCH OF WIDTH	PEAK FEET/ MINUTE	HORSEPOWER PER $	QUIETNESS	SMOOTHNESS	FLEXIBILITY	COMPACTNESS
ROLLER CHAIN	65	2000	1	3	3	1	2
SILENT CHAIN	43	3500	3	2	2	1	3
GEAR BELT	28	5800	4	2	2	2	4

TABLE 2.3.1

1 = MOST FAVORABLE
4 = LEAST FAVORABLE

DRIVE COMPARISONS

horsepower per dollars. It is clear from the above analysis that roller chain would be the best selection with regard to the water twister. The gear belt does not require lubrication but its compactness and horsepower per dollars put this system at a distinct disadvantage with respect to the roller chain system. The silent chain system has the advantage of being quieter and smoother than the roller chain but the advantages are not enough to overcome the roller chain leads in horsepower per dollar and compactness.

The WTG40M characteristics are shown in Table 2.3.1. An analysis was carried out for determining the proper bearings for the roller chain transmission. Overhung loads, thrust, and gyroscopic moment in yaw were considered.

$$\text{Thrust} = C_T \times \tfrac{1}{2}\rho\pi R^2 V^2 = 1473 \text{ lbs.}$$

Where:

C_T = Thrust Coefficient = .754

ρ = Air Density = .00237 Slug/Ft^3

R = Wind Wheel Radius = 39.5 ft

V = Rated Wind Speed = 36.75 ft/sec (25 mph)

The design of a hub is not included in this report, therefore, the Wind Furnace I hub will be used for the calculation of the gyroscopic moment. Preliminary investigations into a new hub design promises to result in a significant reduction in weight. This, however, must be coupled with an increase in wind wheel diameter for this design, 39.5 feet compared to 32.5 feet. It is felt that a good estimate of moment of

TABLE 2.3.1

WTG40M CHARACTERISTICS

Wind Speed MPH	25
Wind Wheel Diameter (feet)	39.5
Number of Blades	2
Tip Speed Ratio	8
Design Stress in Shear PSI	8000
Power HP	56
Thrust LBS	1473
Wind Wheel RPM	141.9
Wind Shaft Torque in LBS	2.517^{E4}
Wind Shaft Diameter (Solid), Inches	2.521
Hollow Wind Shaft OD , Inches	3.043
Hollow Wind Shaft ID, Inches	2.466
Overall Speed-up Ratio	5.28

inertia of the wind wheel about the axis of rotation would be 360 lb-ft sec^2. This will give a very conservative estimate of the gyroscopic moment induced in yaw for the WTG40M. For steady yaw rates the following equation applies:

$$\text{Gyroscopic Moment} = M_{yaw} = I_Z \Omega \psi = 530 \quad \text{-lb}$$

Where:

I_Z = Moment of inertia of the wind wheel about the axis of rotation 360 ft-lb sec^2

Ω = Rotational speed (rated) = 14.78 radians/sec

ψ = Maximum yaw rate = 0.10 radians/sec

Table 2.3.2 shows the WTG40M roller chain transmission characteristics as well as the prices for the individual parts.

Figure 2.3.2 shows the model 14 water and roller chain speed-up transmission, where sprocket pitches and number of teeth are called out. The WTG40M is block diagrammed in Figure 2.3.3 which includes 1978 prices.

WTG40E Transmission

Presented here are the results of a considerable investigation to determine the best choice of a variable speed transmission. The hydrostatic transmission of the rugged, high-quality moderate-price type, that has become so useful in farm machinery and other modern power drives seems to be far and away the best choice. Other candidate transmissions were either far too costly or could not carry the load.

The hydrostatic transmission comprises a variable displacement

TABLE 2.3.2

ROLLER CHAIN TRANSMISSION

CHARACTERISTICS

SHAFTING

	Outside Diameter	Inside Diameter	Length	Price
Wind Shaft	3.125"	2.375	72"	$15
Idler Shaft	2.00"	--	14"	$ 4
Output Shaft	1.50	--	9"	$ 3

BEARINGS

	Bearing Number	Quantity	Price
Wind Shaft	FAG 3216DA	3	$71.61
Idler Shaft	FAG NU1011	2	$60.32
Output	FAG NU1008	1	$24.95

Lube Case

Estimated Cost $100

FIRST STAGE

Type of Drive System: Roller

	Small Sprocket	Large Sprocket	Chain
Part Number	120B18	120B40	120
Diameter	9.41	19.96	--
Cost	$50.60	$108.28	77.94
Center Distance	15.14		
Length Overall	29.83		
Ratio	2.22		

SECOND STAGE

Type of Drive System: Roller Chain

	Small Sprocket	Large Sprocket	Chain
Part Number	10017	100B40	100
Diameter	7.44	16.63	--
Cost	$26.70	61.88	41.42
Center Distance	10.09"		
Length Overall	22.13"		
Ratio	2.35		

TOTAL TRANSMISSION COST

$645.70

MODEL 14 WATER TWISTER AND ROLLER CHAIN SPEED UP TRANSMISSION

NOTE: NUMBERS SUCH AS 140B17 REFER TO BROWNING CATALOG DESIGNATION

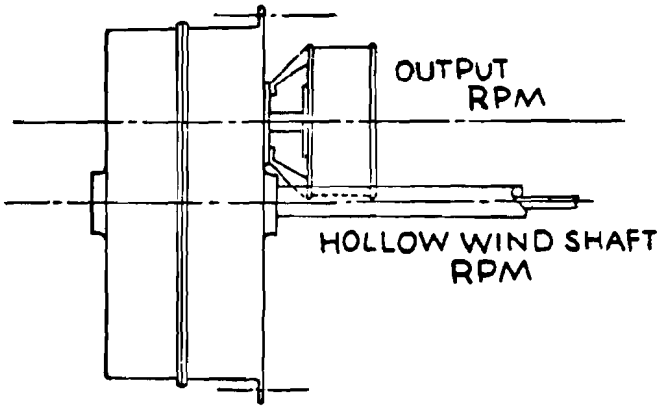

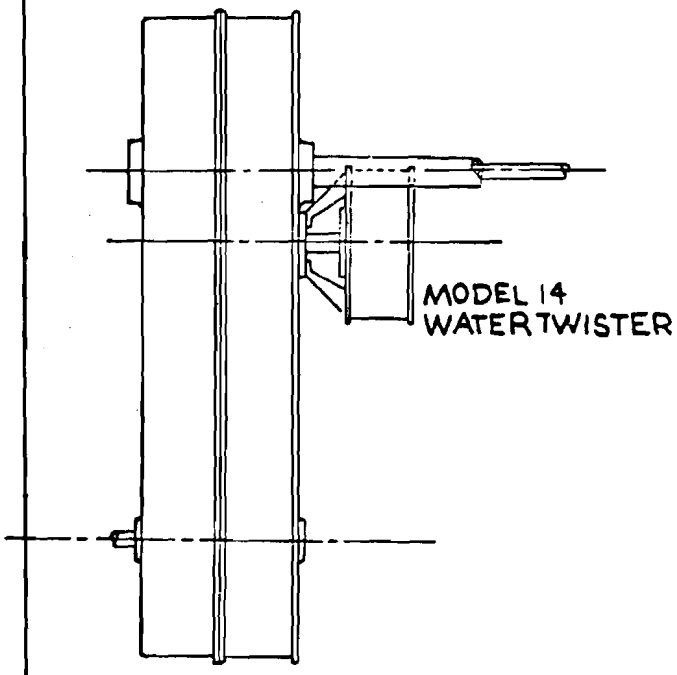

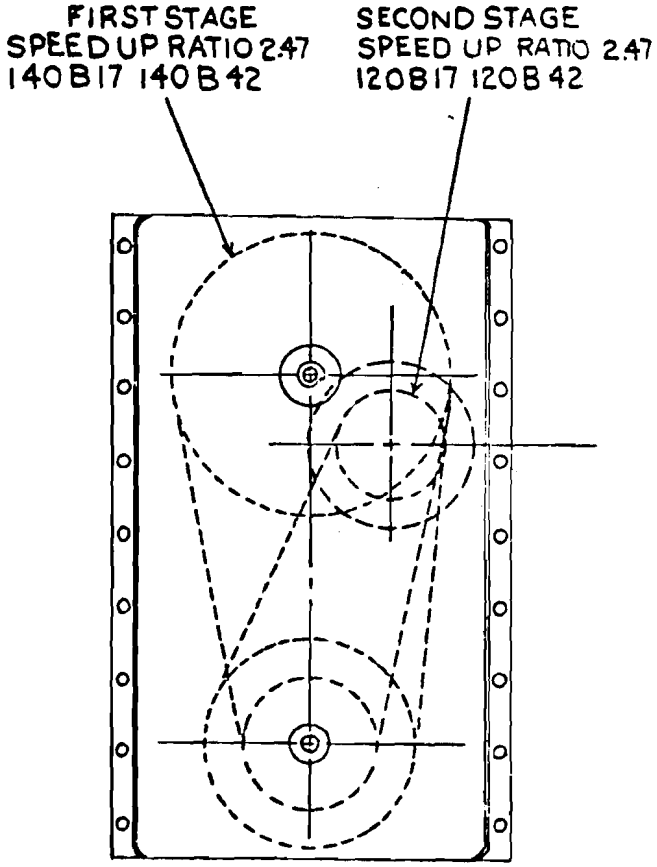

FIGURE 2.3.2

WTG 40M

WATER TWISTER MODEL 14

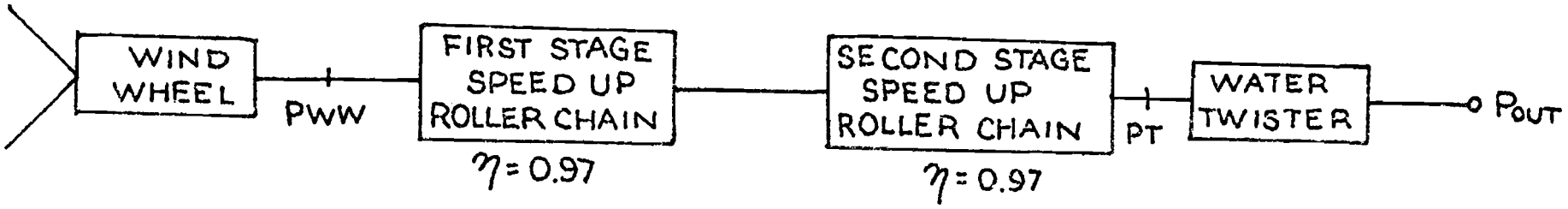

WATER TWISTER MODEL 14	PWW POWER AT WIND WHEEL (HP)	PWW POWER AT WIND WHEEL (KW)	PT POWER OUT OF TRANSMISSION (HP)	PT POWER OUT OF TRANSMISSION (KW)	POWER OUT (HP)	POWER OUT (KW)
	56	43	55	42	53	40

MECHANICAL DRIVE AND WATER TWISTER COST

$ TOTAL	$/KW
1445.70	36.14

FIGURE 2.3.3

constant output flow pump and a fixed displacement hydraulic motor. The variable displacement axial piston pump is capable of responding to a hydraulic input to provide a constant output flow while input speed varies over an approximate 2:1 range. For highest efficiency, the pump must operate between 1450 and 2900 rpm input. The output flow is received by a fixed displacement axial piston hydraulic motor. The hydraulic motor delivers an output rpm of 1900 $\pm$7%. The hydrostatic transmission is pictured in Figure 2.3.4.

Given the input of the hydrostatic transmission is between 1450 and 2900 rpm, a speed-up transmission of 26.8:1 is required from wind shaft to pump shaft. Therefore, the WTG40E will be capable of delivering 240 or 480 volts at 60hz, 3 phase at wind wheel rpms between 54 and 109 which correspond to wind speeds of 12.5 and 25 mph. The speed-up transmission comprises a 15:1 gear box plus a 1.78:1 gear belt stage driving the pump end of the hydrostatic transmission as pictured in Figure 2.3.5. In this case a gear drive was chosen over other drives because of its compactness, its availability, and its ability to operate at high rates of speed. The roller chain concept in the WTG40M would not be able to carry loads necessary at the speeds required of the WTG40E. This can be seen by referring to Figure 2.3.1. Table 2.3.3 shows the basic WTG40E characteristics. The 15:1 gear box and the hydrostatic transmission are both off-the-shelf items, and have appropriate load carrying characteristics for the WTG40E. The WTG40E system is diagrammed in Figure 2.3.6 which also includes prices of the 15:1 gear box, gear belt drive, hydrostatic transmission, and the

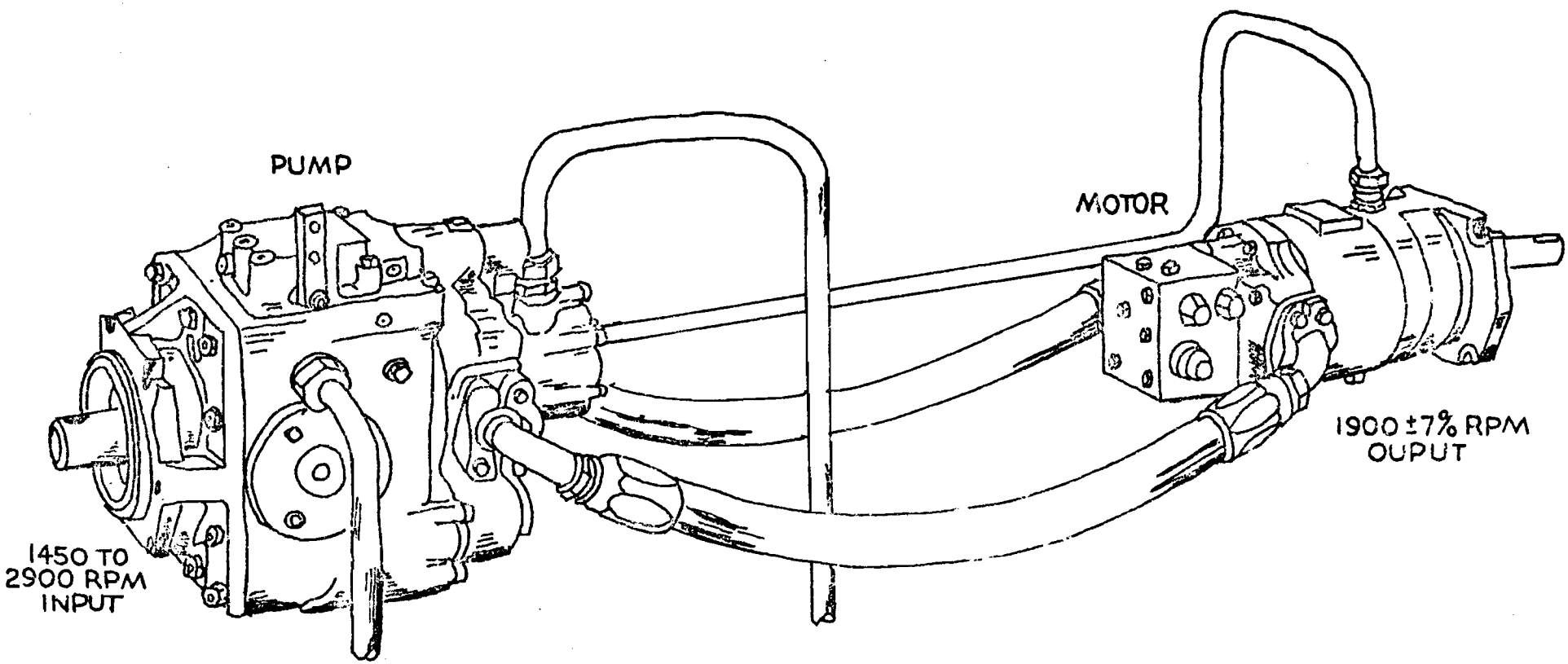

THE HYDROSTATIC TRANSMISSION

FIGURE: 2.3.4

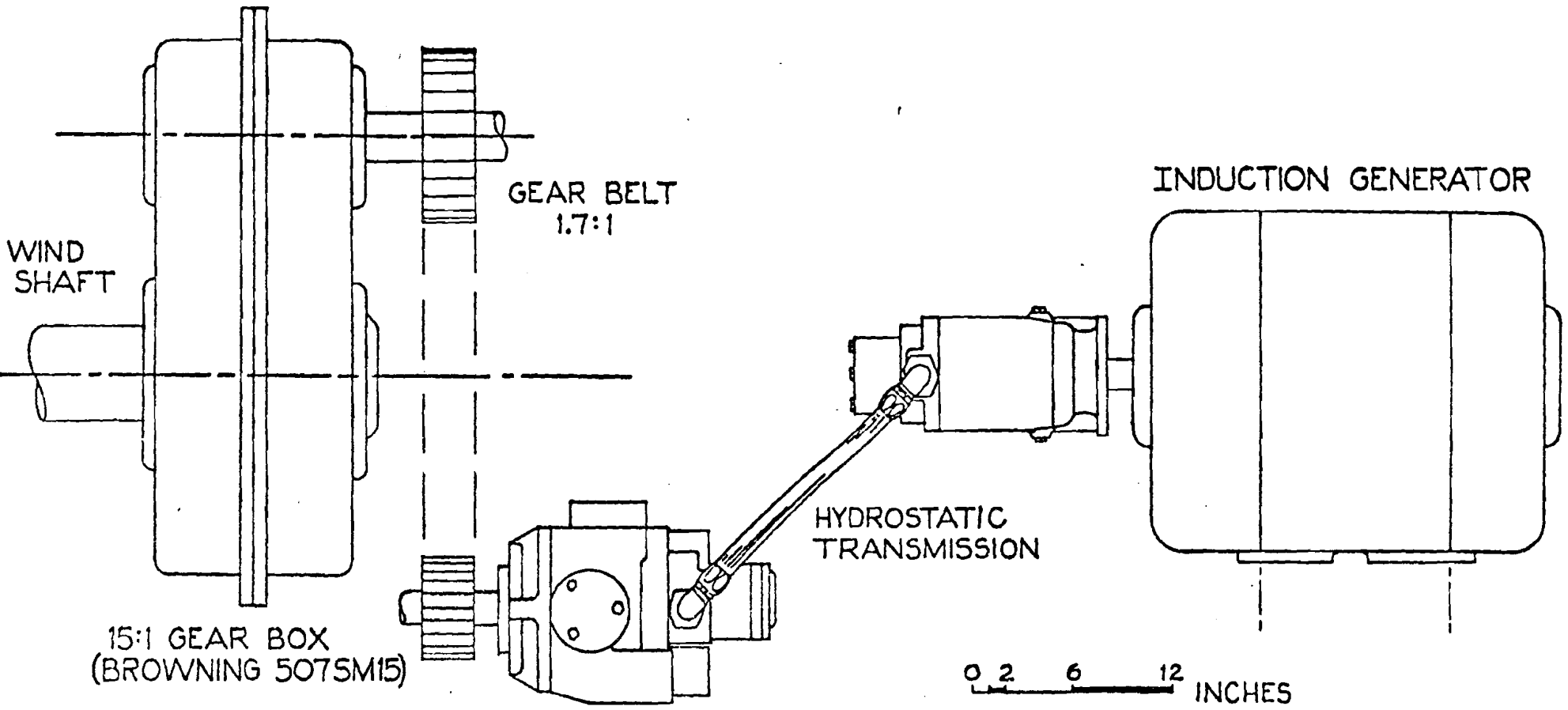

FIGURE 2.3.5

CONSTANT SPEED ELECTRIC PLANT
(±7% SPEED VARIATION)

TABLE 2.3.3

WTG40E CHARACTERISTICS

Wind Speed MPH	25
Wind Wheel Diamter (feet)	51
Number of Blades	2
Tip Speed Ratio	8
Design Stress in Shear, PSI	8000
Power, HP	94.45
Thrust, Lbs.	2455
Wind Wheel RPM	109.9
Wind Shaft Torque, in Lbs.	5.418^{E4}
Wind Shaft Diameter (Solid), inches	3.255
Hollow Wind Shaft OD, inches	3.929
Hollow Wind Shaft ID, inches	3.184
Overall Speed-up Ratio	26.39

WTG 40 E

SINGLE OUTPUT INDUCTION GENERATOR
(SOIG)

CONSTANT GENERATOR SPEED: ±7% (RPM_{BASE} = 1900)

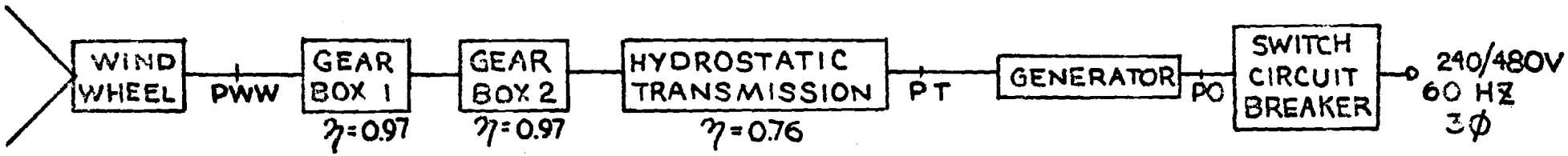

GENERATOR TYPE	PWW POWER AT WINDWHEEL (HP)	PWW POWER AT WINDWHEEL (KW)	PT POWER OUT OF TRANSMISSION (HP)	PT POWER OUT OF TRANSMISSION (KW)	EFFICIENCY OF GENERATOR	POWER OUT (HP)	POWER OUT (KW)
SOIG 15% SLIP	94	70	75	56	0.80	54	40

MECHANICAL DRIVE AND ELECTRICAL PLANT COST

$ TOTAL	$/KW
5520	138

FIGURE 2.3.6

single induction output generator. The WTG40E transmission characteristics are shown in Table 2.3.4 along with the component prices.

TABLE 2.3.4

WTG40E TRANSMISSION CHARACTERISTICS

FIRST STAGE
SHAFT MOUNT REDUCED

Description	Cost
15:1 Gear Box Browning 507SM15	$890

SECOND STAGE
GEAR BELT

Pulley 32xHR400	$110
Pulley 18xHR400	$ 60
XH 7/8 Pitch Gear Belt 840xH400	$195.50

THIRD STAGE
HYDROSTATIC TRANSMISSION

Dynapower Model 120	$3,700
TOTAL	$4,955.50

CHAPTER IV - POLE MATCHER

The pole matcher is a vertical upward extension of the support structure which transmits axial load and moment into the support structure top and permits easy yawing into the wind. The greatest structural loading will be that of a beam subjected to bending produced by a broadside wind gust. For design purposes, the projected area of the nacelle and blades were subjected to a gust of 165 mph. This corresponds to a force of approximately 10,000 lbs. It is considered a very conservative approach for two reasons: the nacelle body is anything but a flat plate; and secondly, the system will yaw out of the wind unless the wind gust is considered a step function from zero to 165 mph, which is highly improbable.

The pole matcher construction drawings are shown in Figures 2.4.1 through 2.4.5. The design is common to both the WTG40E and the WTG40M. The top of the pole matcher will carry a tapered roller bearing on which the entire aloft weight will rest. It is also capable of carrying the radial load induced in yaw at rated conditions. The bottom of the pole matcher is fitted with a teflon filled plastic skirt bearing, similar to that used on the Wind Furnace I, which is designed to withstand radial load induced in yaw as well as an overturning moment due to hurricane force winds (165 mph). The skirt bearing must be able to withstand the crushing action this type of loading would create. The skirt bearing is not required to support thrust loads under normal operating conditions.

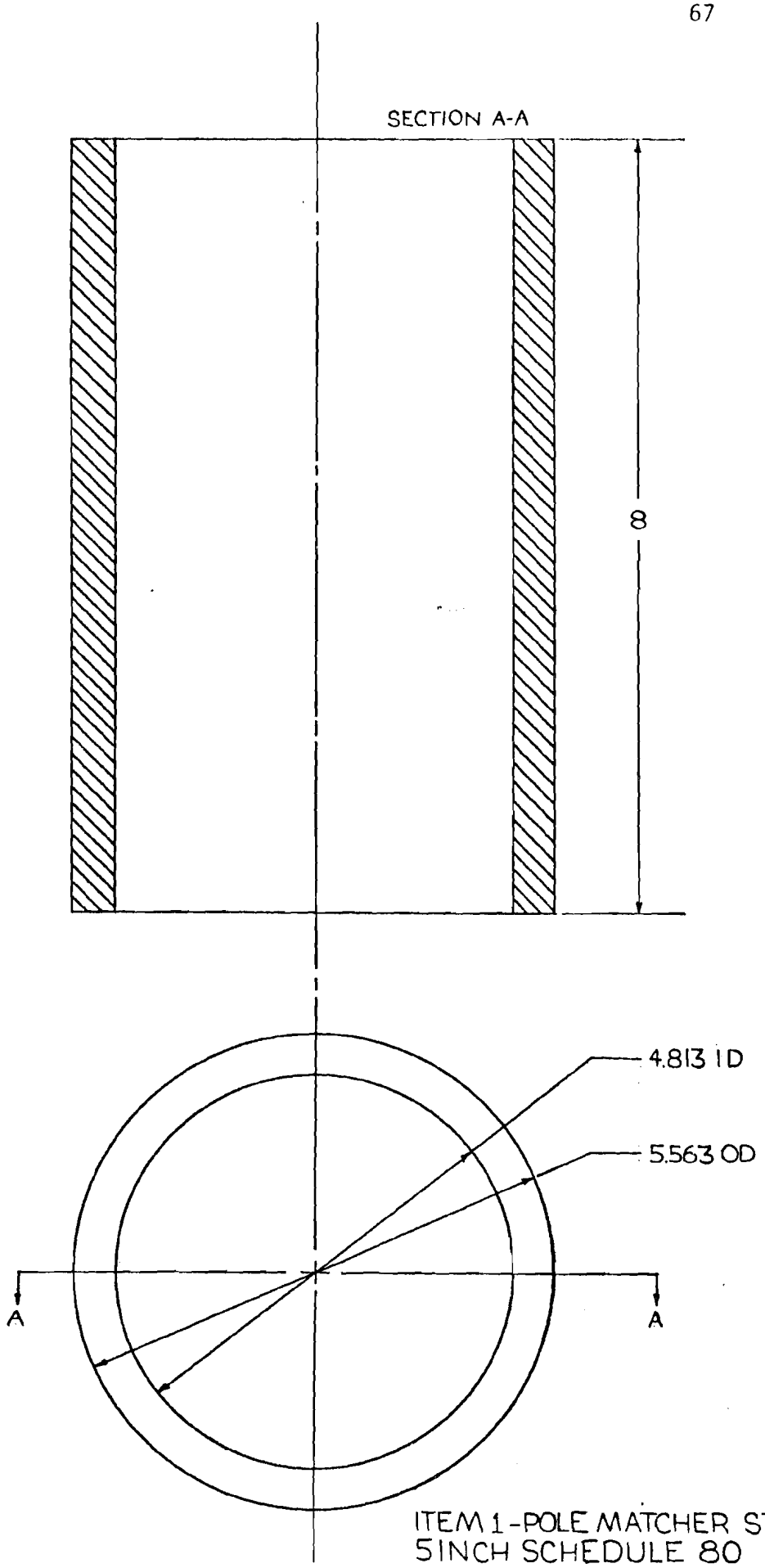

FIGURE 2.4.1

ITEM 1-POLE MATCHER STEM
5 INCH SCHEDULE 80

POLE MATCHER BASE PLATE ITEM 2

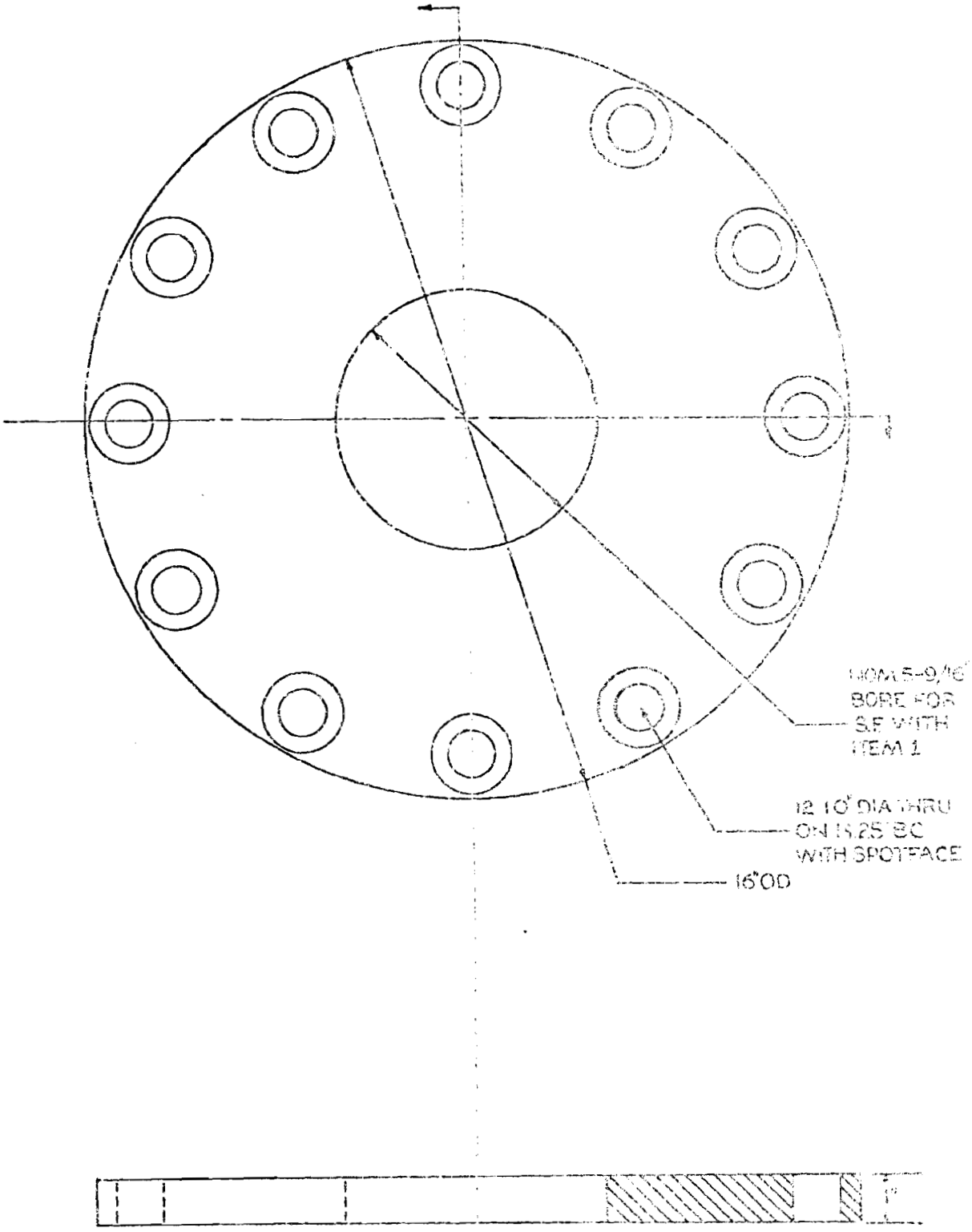

FIGURE 2.4.2

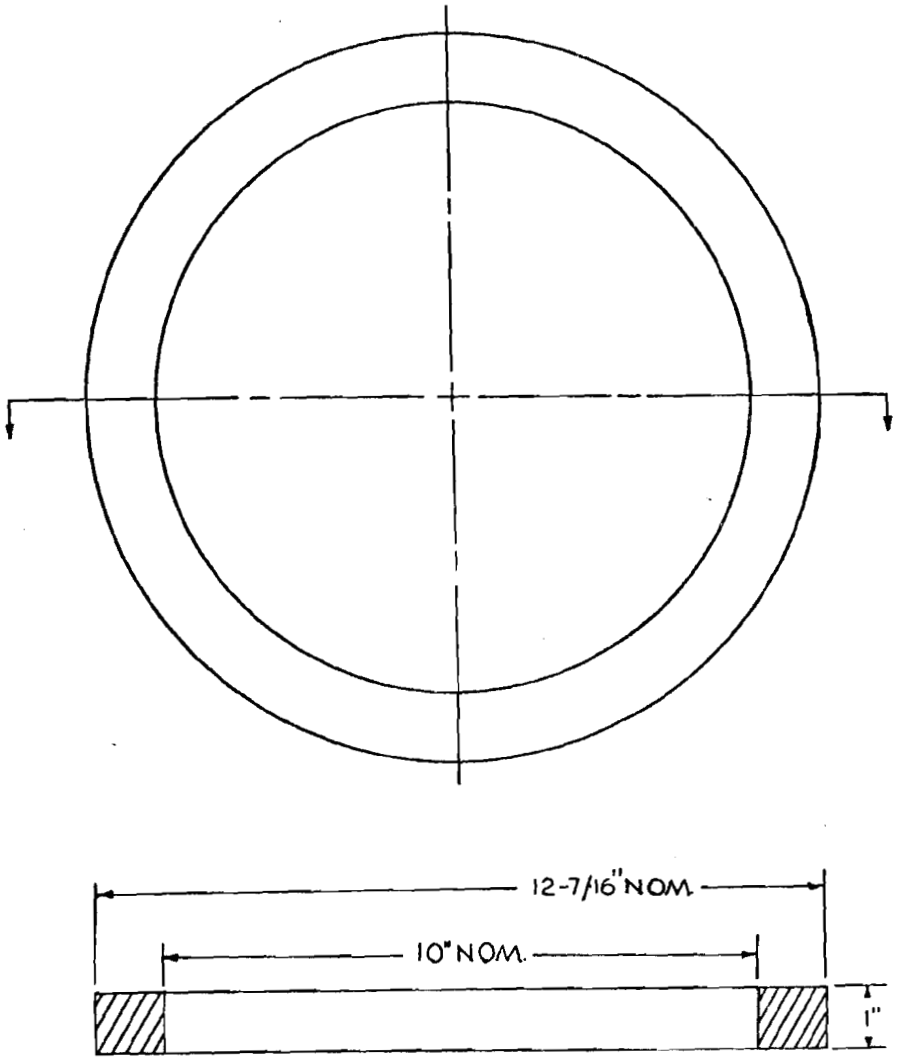

ITEM 3 POLE MATCHER RING

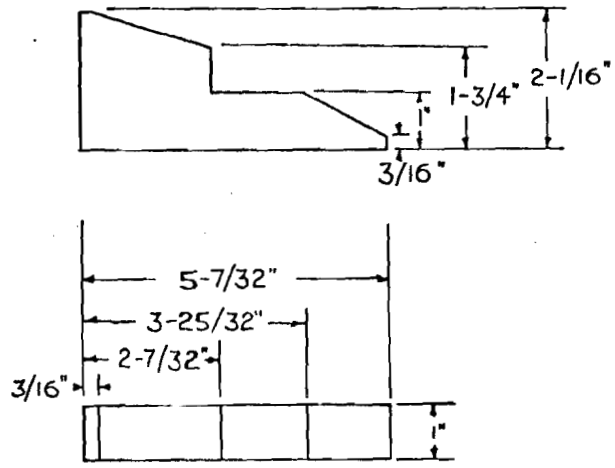

ITEM 4 POLE MATCHER RIB
FOUR PIECES REQUIRED

FIGURE 2.4.3

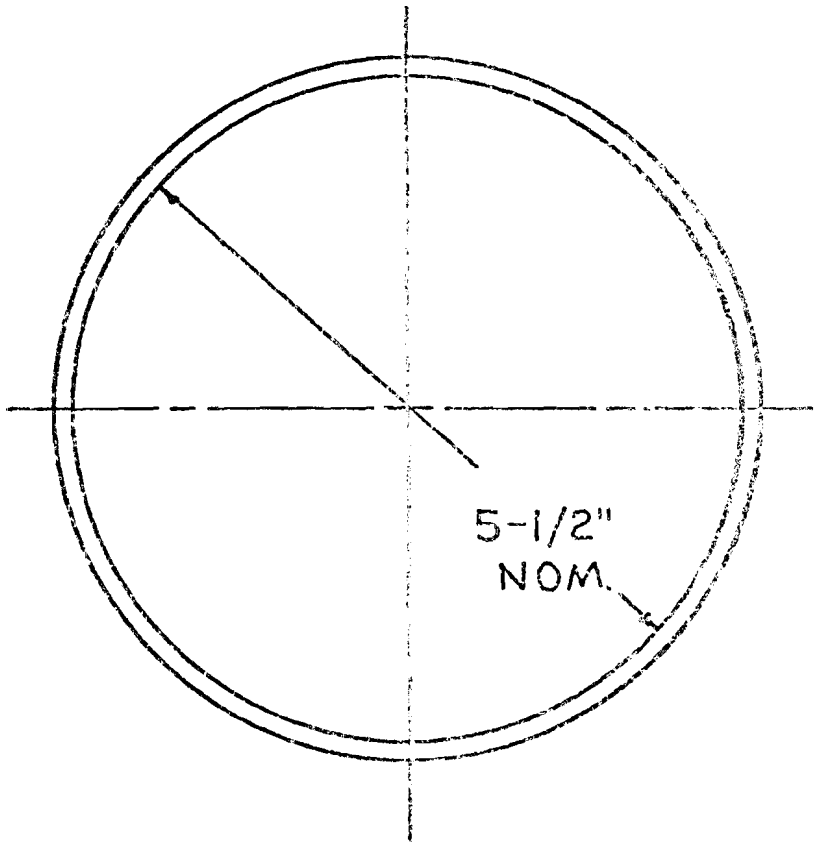

ITEM 5
MAIN BEARING SUPPORT

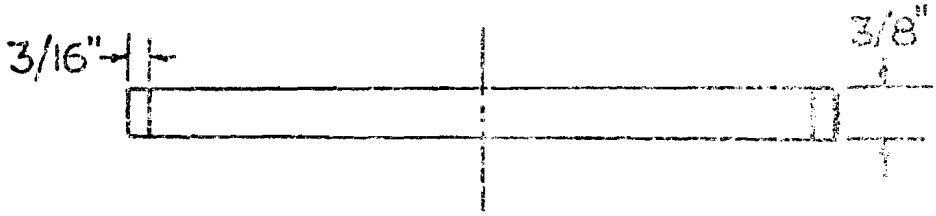

FIGURE 2.4.4

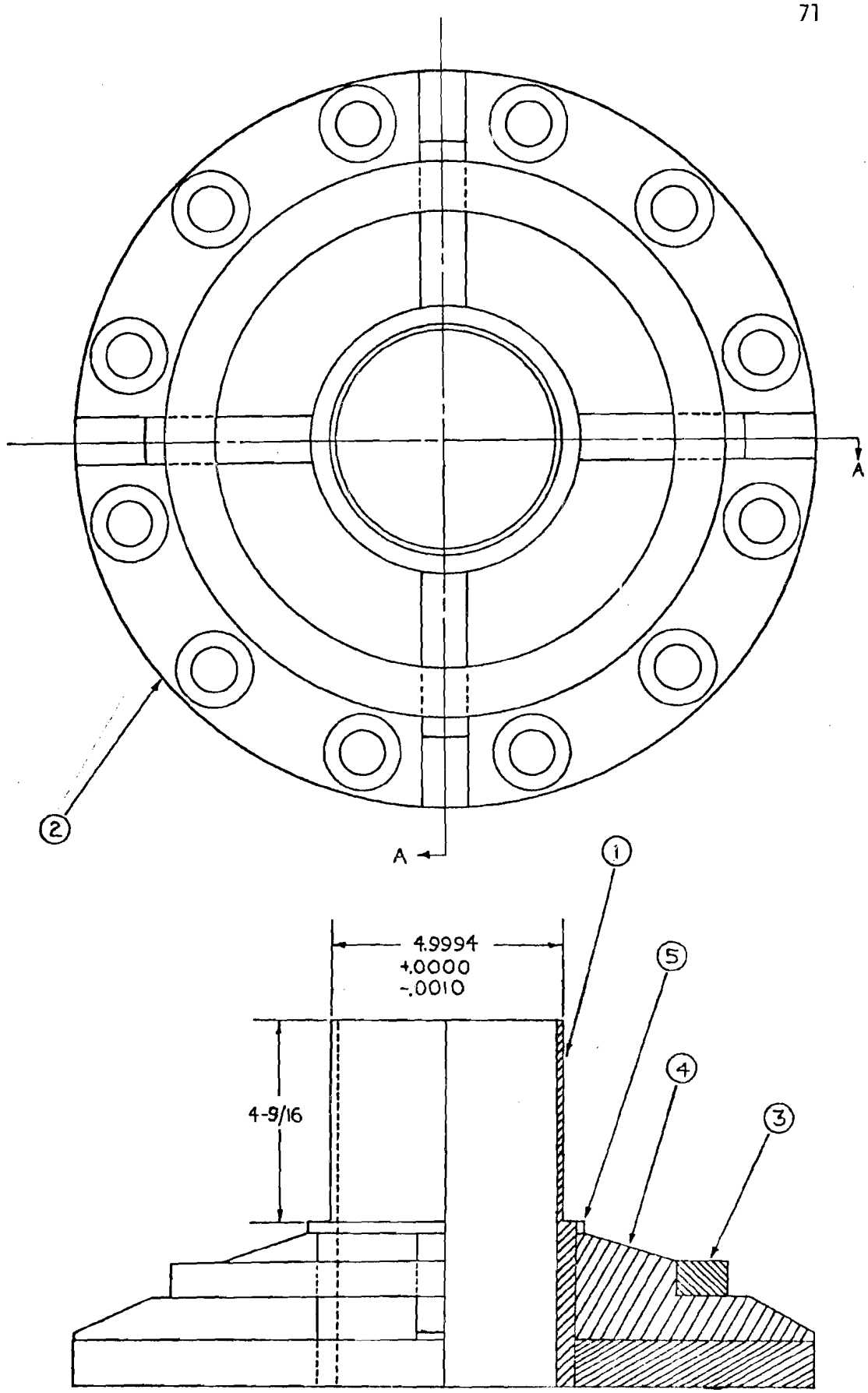

POLE MATCHER SUB ASSEMBLY

FIGURE 2.4.5

Electrical and fluid paths to the ground must pass across the pole matcher-main frame interface. The pole matcher is designed with slip rings for the electrical components and a double-pass hydraulic rotating union for the fluid circuit used in the WTG40M (water twister concept). Although the WTG40E and the WTG40M pole matcher serve the same purposes structurally, they do differ in that the WTG40E delivers electrical power to the ground while the WTG40M delivers hot water. In both systems electrical leads must be included for monitoring and control purposes, as well as lighting protection. The basic pole matcher is designed to be capable of handling both needs by means of the pole matcher extension shown in Figure 2.4.6. The pole matcher extension (PME) is attached to the top of the pole matcher. Figure 2.4.7 shows the pole matcher plug (PMP) which is machined for a snug fit into the top of the pole matcher, then welded in place. The PME is then threaded into the PMP atop of the pole matcher and locked in place by means of a locking nut. The WTG40M must use a slow speed hydraulic rotating union (HRU) pictured in Figure 2.4.6 to deliver the hot water generated aloft to the ground. The WTG40M also needs a slip ring assembly for monitoring and control purposes which is easily attached to the PME by means of set screws. The WTG40M slip ring assembly is shown in Figure 2.4.6. The WTG40E does not require the HRU; it does, however, require a modified slip ring assembly. In addition to the slip rings used for the WTG40M, the WTG40E requires three more to transmit A-C power to the ground. The modified slip ring assembly is shown in Figure 2.4.8 and is easily attached to the PME. The slip

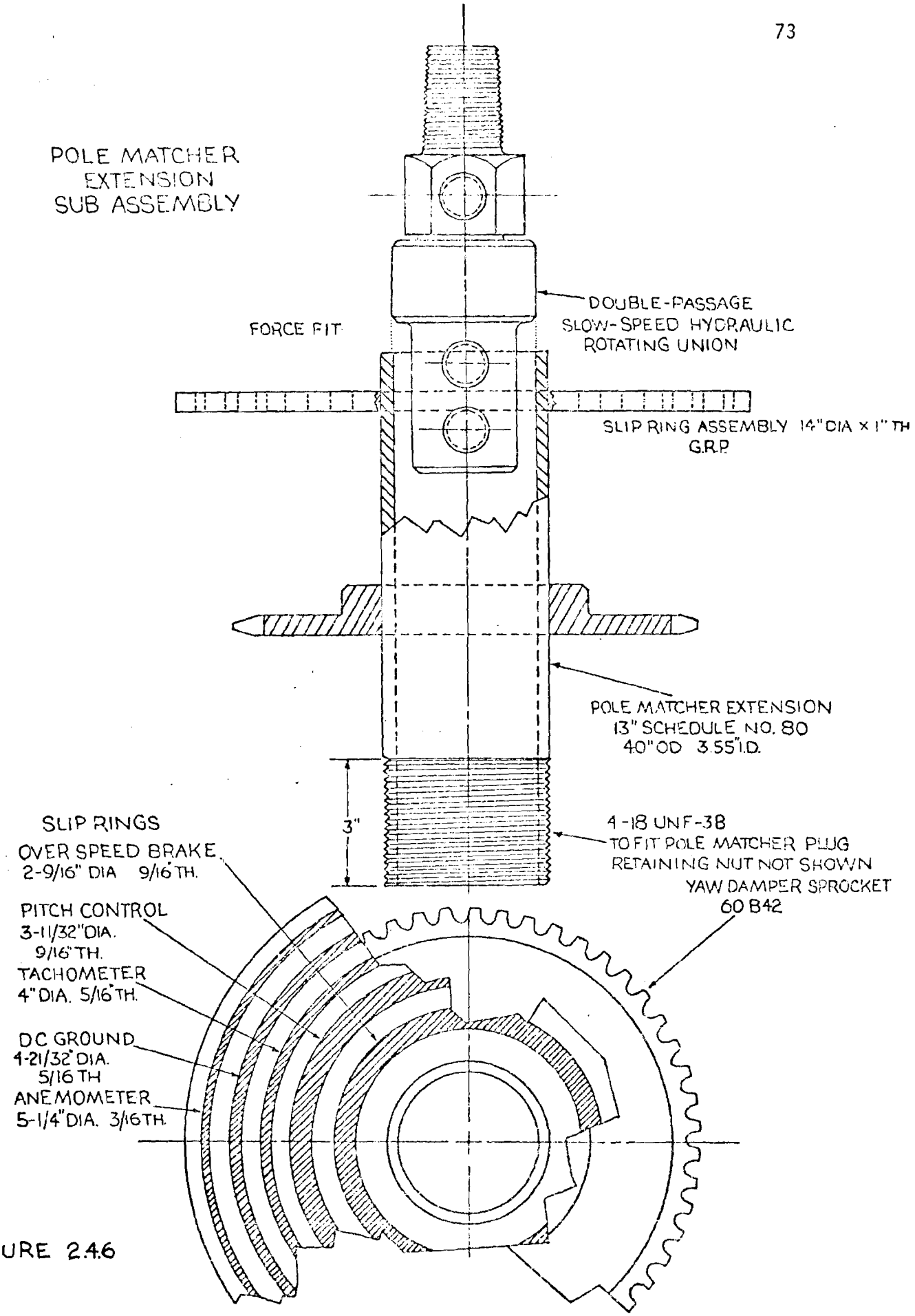
POLE MATCHER
EXTENSION
SUB ASSEMBLY
FORCE FIT
DOUBLE-PASSAGE
SLOW-SPEED HYDRAULIC
ROTATING UNION
SLIP RING ASSEMBLY 14" DIA x 1" TH
G.R.P.
POLE MATCHER EXTENSION
13" SCHEDULE NO. 80
40" OD 3.55" I.D.
3"
4-18 UNF-3B
TO FIT POLE MATCHER PLUG
RETAINING NUT NOT SHOWN
YAW DAMPER SPROCKET
60 B42
SLIP RINGS
OVER SPEED BRAKE
2-9/16" DIA 9/16" TH.
PITCH CONTROL
3-11/32" DIA.
9/16" TH.
TACHOMETER
4" DIA. 5/16" TH.
DC GROUND
4-21/32" DIA.
5/16 TH
ANEMOMETER
5-1/4" DIA. 3/16 TH.

FIGURE 2.4.6

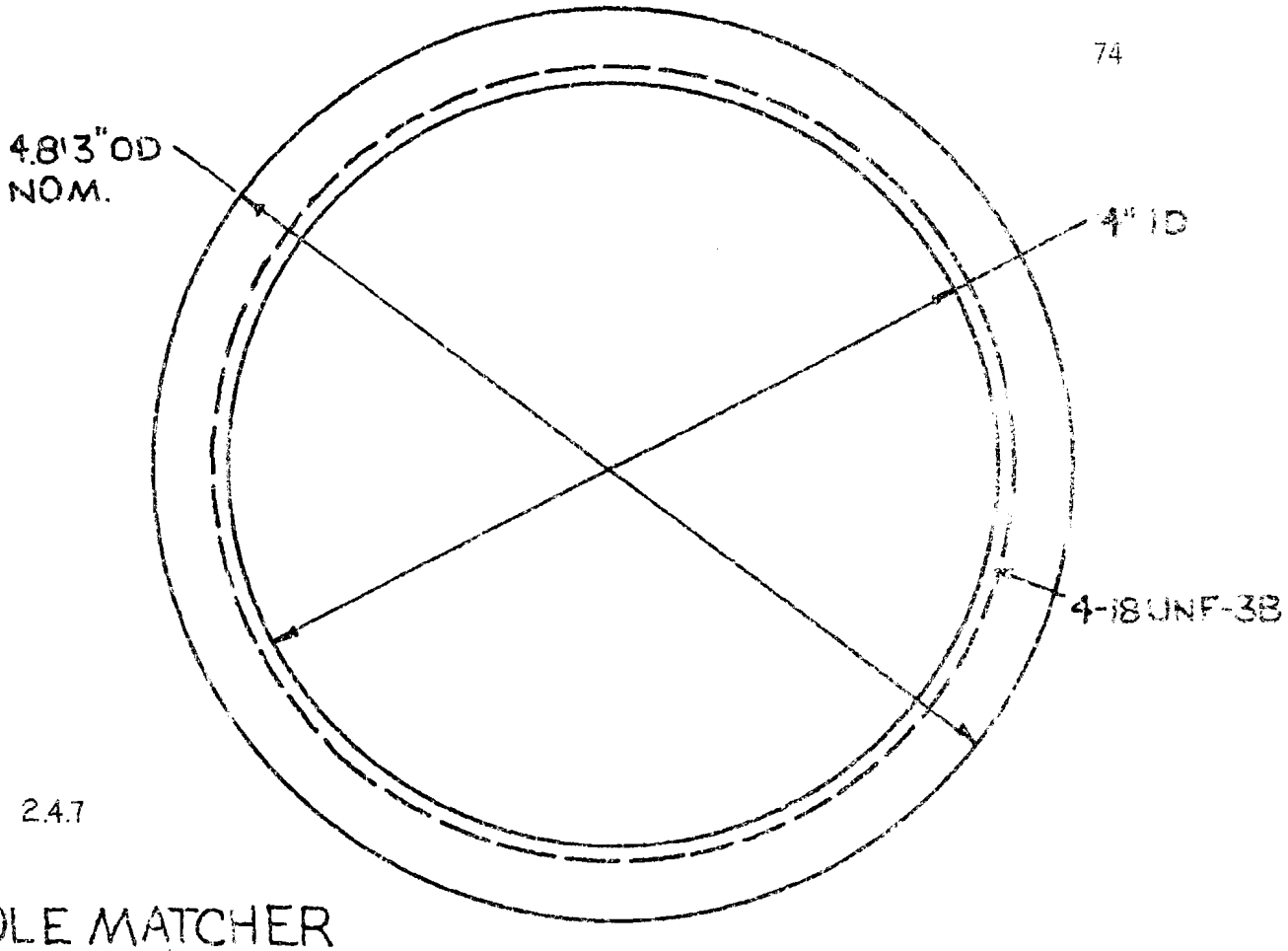

FIGURE 2.4.7

POLE MATCHER
PLUG

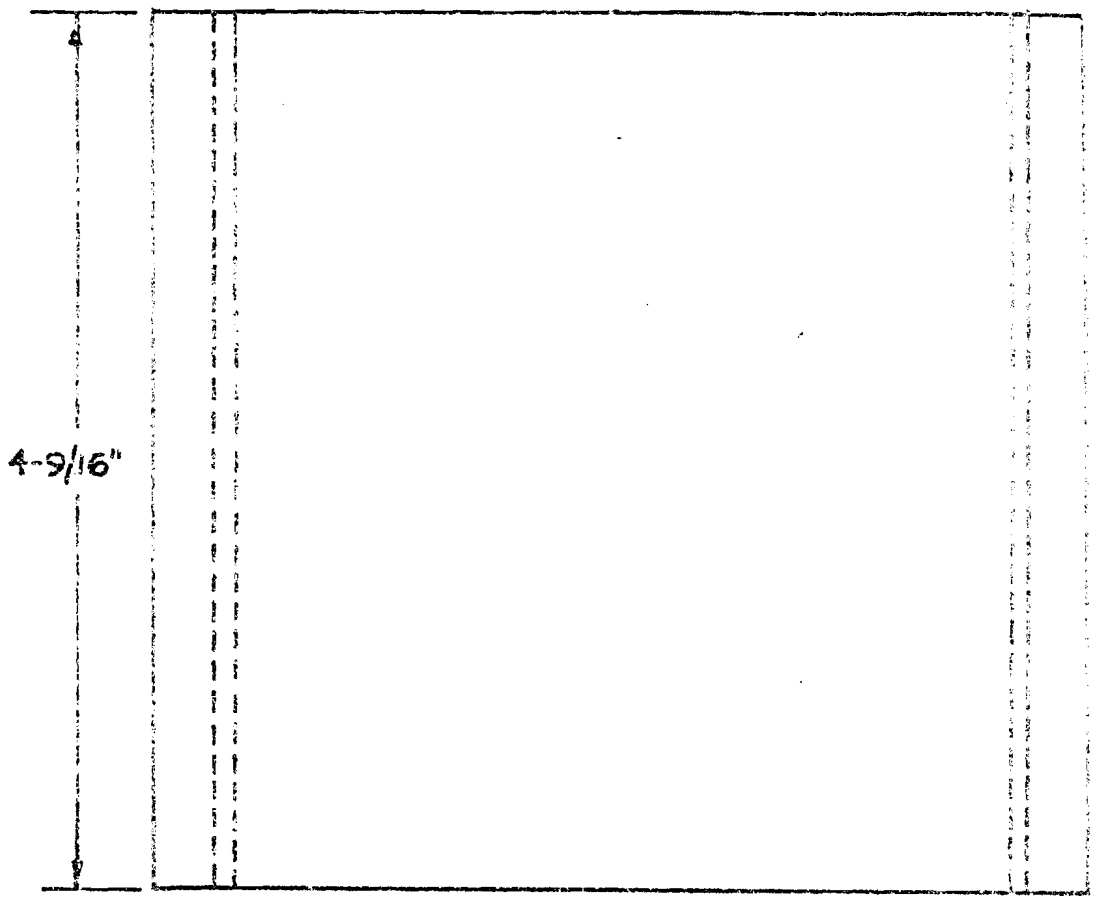

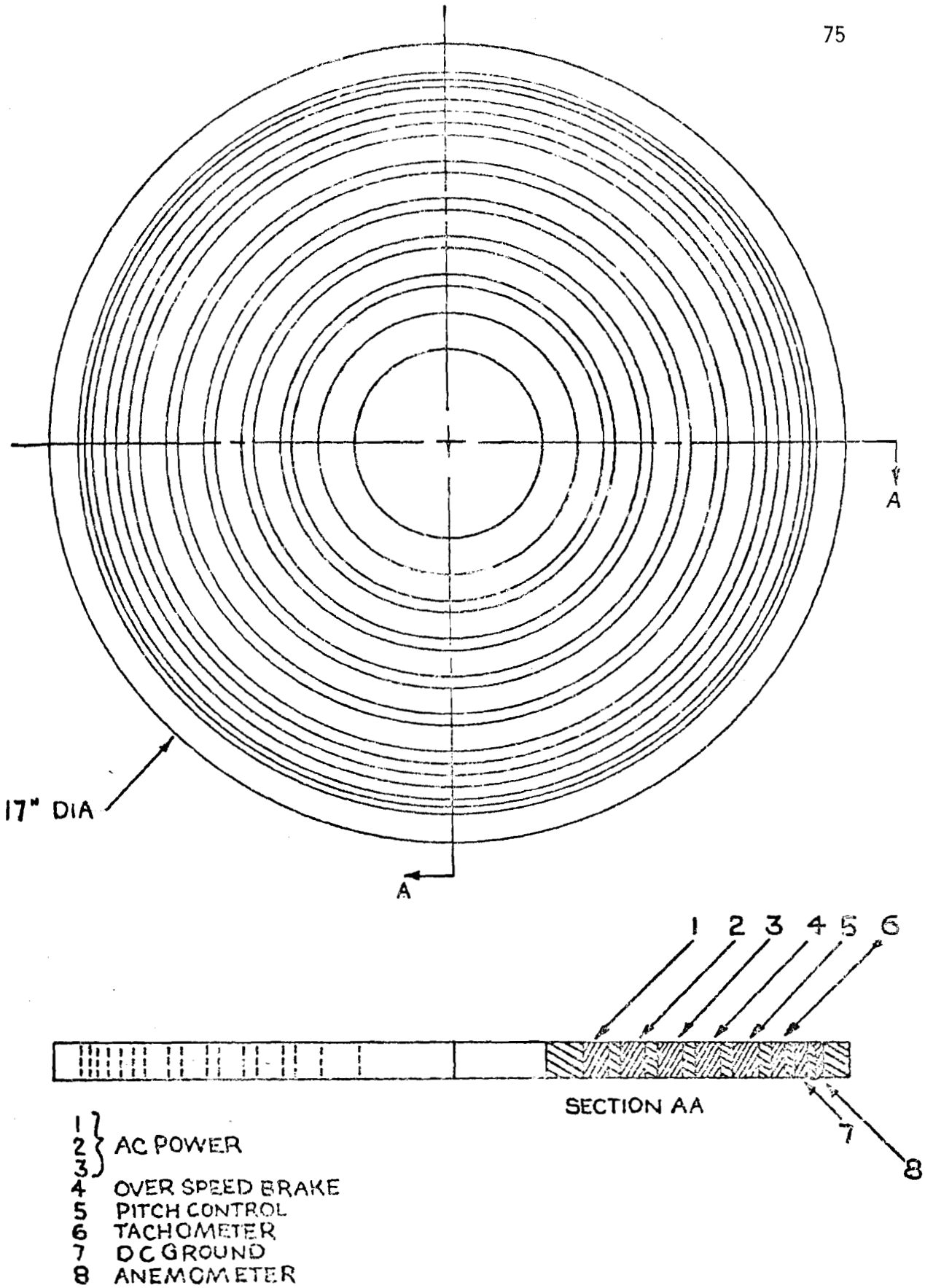

WTG40E SLIP RING ASSEMBLY

FIGURE 2.4.8

ring assemblies for the WTG40E and the WTG40M are positioned just below the main deck of their perspective main frames. Power is transmitted through the main deck to the slip rings or vice versa by means of brush blocks penetrating through the main deck as shown in Figure 2.4.9.

The cost breakdown for the WTG40E and the WTG40M pole matcher and supporting hardware is shown in Table 2.4.1.

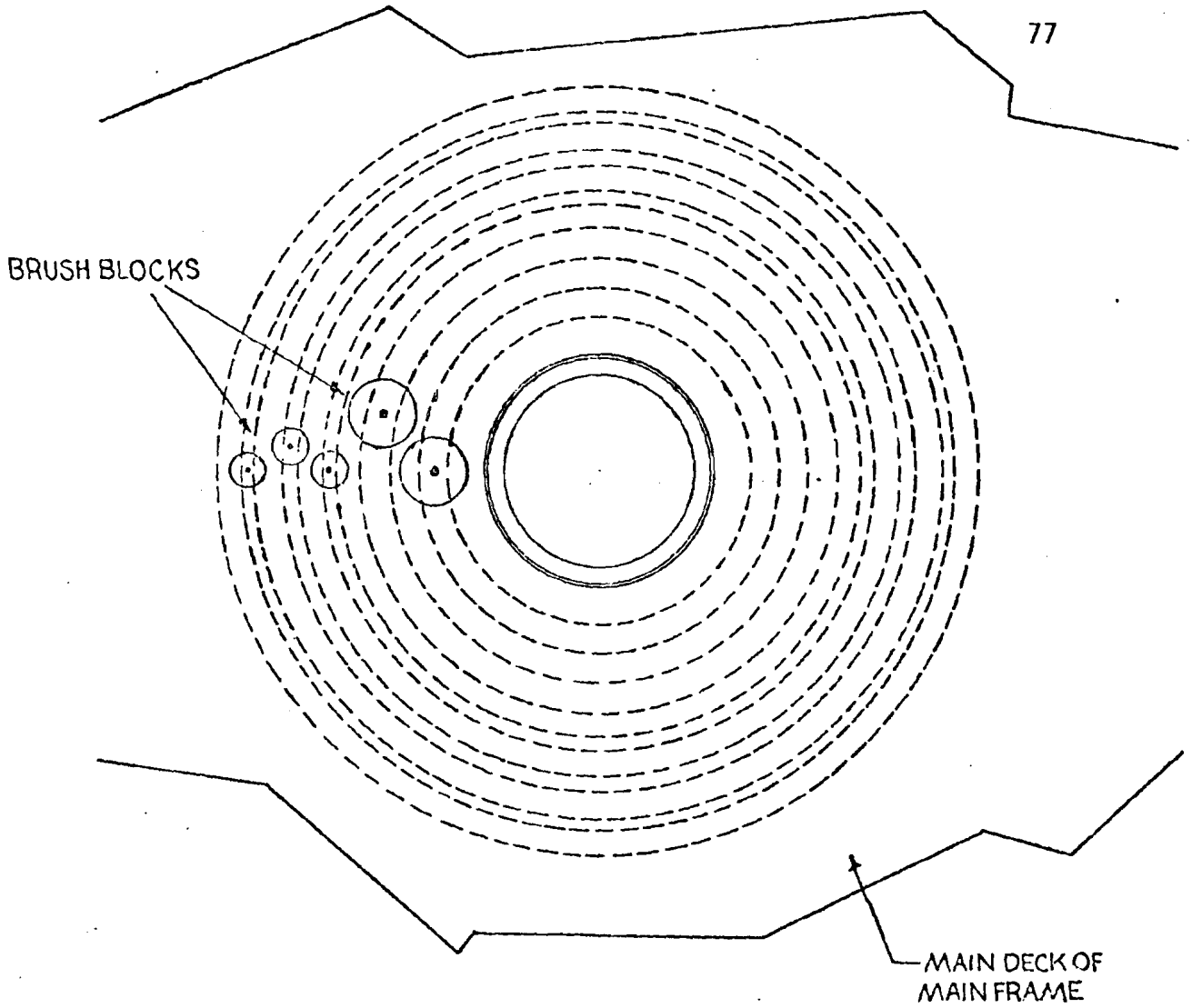

SLIP RING AND BRUSH BLOCK
ASSEMBLY

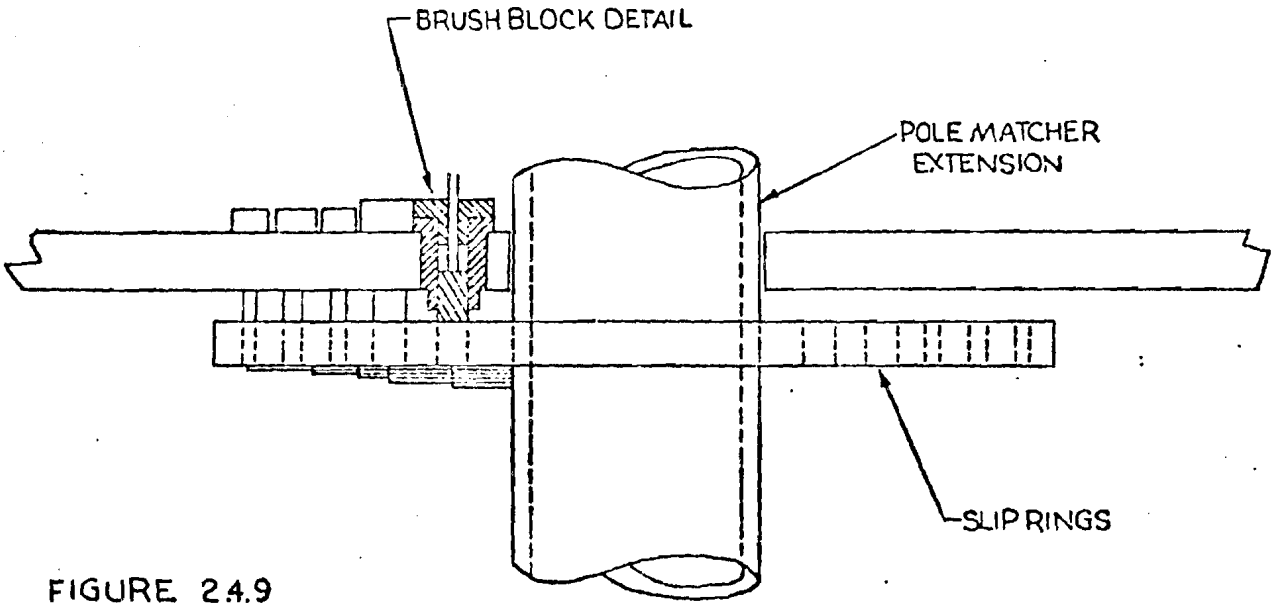

FIGURE 24.9

TABLE 2.4.1

POLE MATCHER COST CHART

Item	Quantity	Estimated Cost WTG40M	Estimated Cost WTG40E
Pole Matcher Stem Sched. 80 5" nom	8"	$18.00	$18.00
Pole Matcher Base Plate	1	15.00	15.00
Pole Matcher Ribs	4	4.00	4.00
5.25" Bore Taper Roller Bearing Tyson, Cone 48290 and cup 48220	1	72.80	72.80
Slip Ring Material SAE 660 Brg. Bronze		50.00	80.00
Main Bearing Support	1	5.00	5.00
Plastic Pitch Bearing (PV-80) 12" ID 13.75"OD x 3/4" thick	1	30.00	30.00
Bush with Shunt, ½" Grade (211)		16.45	41.13
Bush Holder with Cap (½)		28.24	70.60
Bush With Shunt ¼ Grade 211		8.18	8.18
Bush Holder with Cap ¼		11.07	11.07
Bush With Shunt 1/8' (Grade H9434)		6.47	6.47
Bush Holder with Cap 1/8		3.96	3.96
Pole Matcher Extension Sched. 80 Nom 3.5"		10.00	10.00
Rotating Union		116.00	--
TOTAL		$395.17	$376.21
		$9.88/kw	$9.41/kw

CHAPTER V - YAW DAMPER

Experience gained from the Wind Furnace I project strongly suggests that some form of yaw damping is necessary. The dynamic characteristics of a wind machine in yaw are elusive at best, at least from the standpoint of the author. For this reason the need to develop a yaw damping system such that the damping characteristics could be infinitely variable within certain limits is desired. By increasing the stiffness of the system, the yaw moment transmitted to the tower would also increase and by reducing the stiffness of the system the yaw rate would increase thereby increasing the gyroscopic moment. Thus the need for variable damping. The characteristics of yaw are not only a function of the wind system but are also dependent on the site. The variable damping system would make it possible to erect the wind machine at any given site and fine tune it. Once in place, it is felt that the machine's safety and productivity could be improved using this method.

The yaw damper under consideration comprises two adjustable gas shock absorbers 90° out of phase with each other as shown in Figure 2.5.1. It can be seen, from Figure 2.5.1, as the driven yaw damper sprocket rotates, one of the shock absorbers will always be in operation thus delivering smooth and continuous damping. Figure 2.5.2 shows one complete cycle. The damping characteristics of the system can easily be changed by increasing or reducing the amount of gas in the shock absorbers. Shock absorbers suitable for this operation are readily available in industry. For example, two gas shocks for this

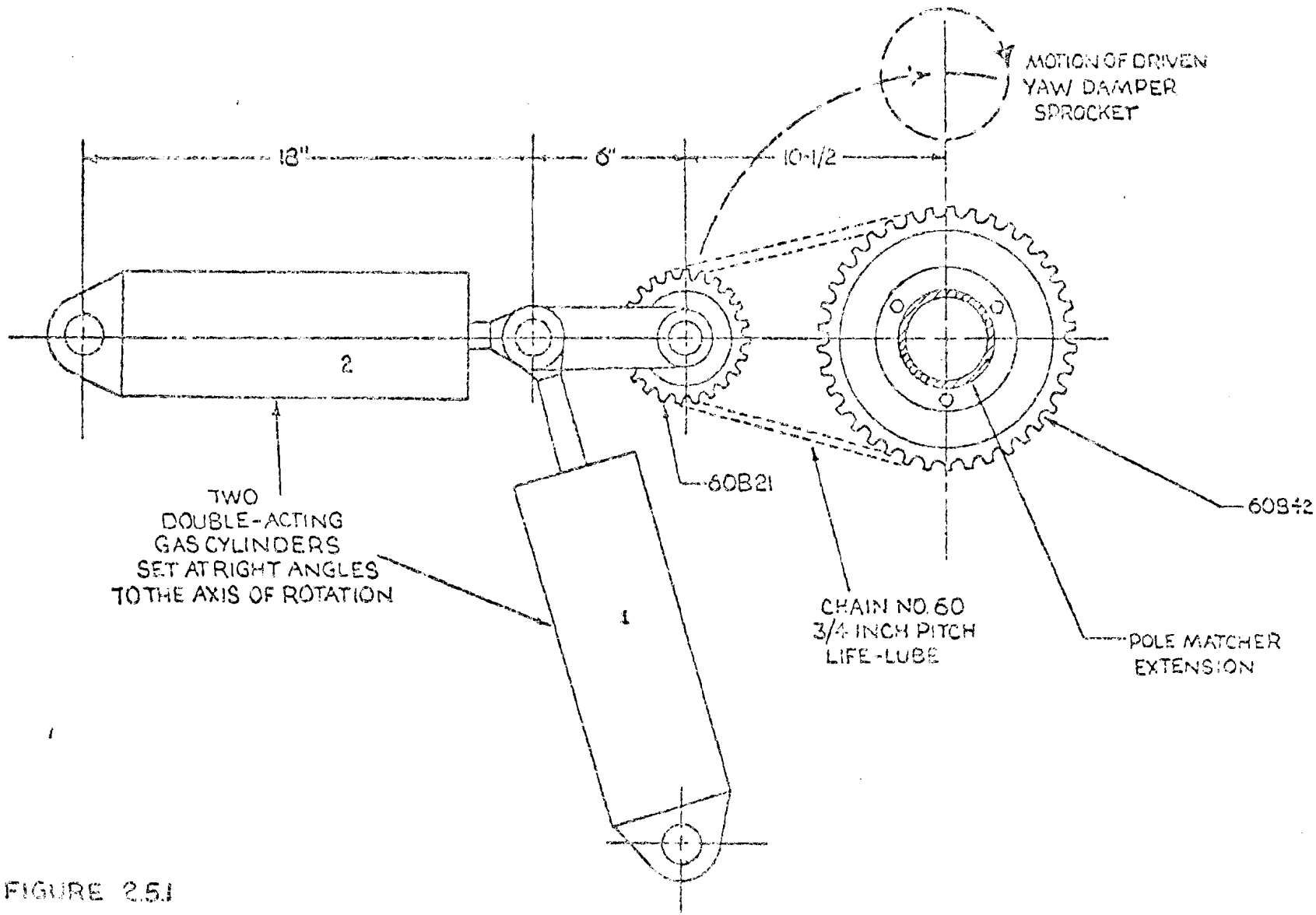

FIGURE 2.5.1

YAW DAMPER CONCEPT

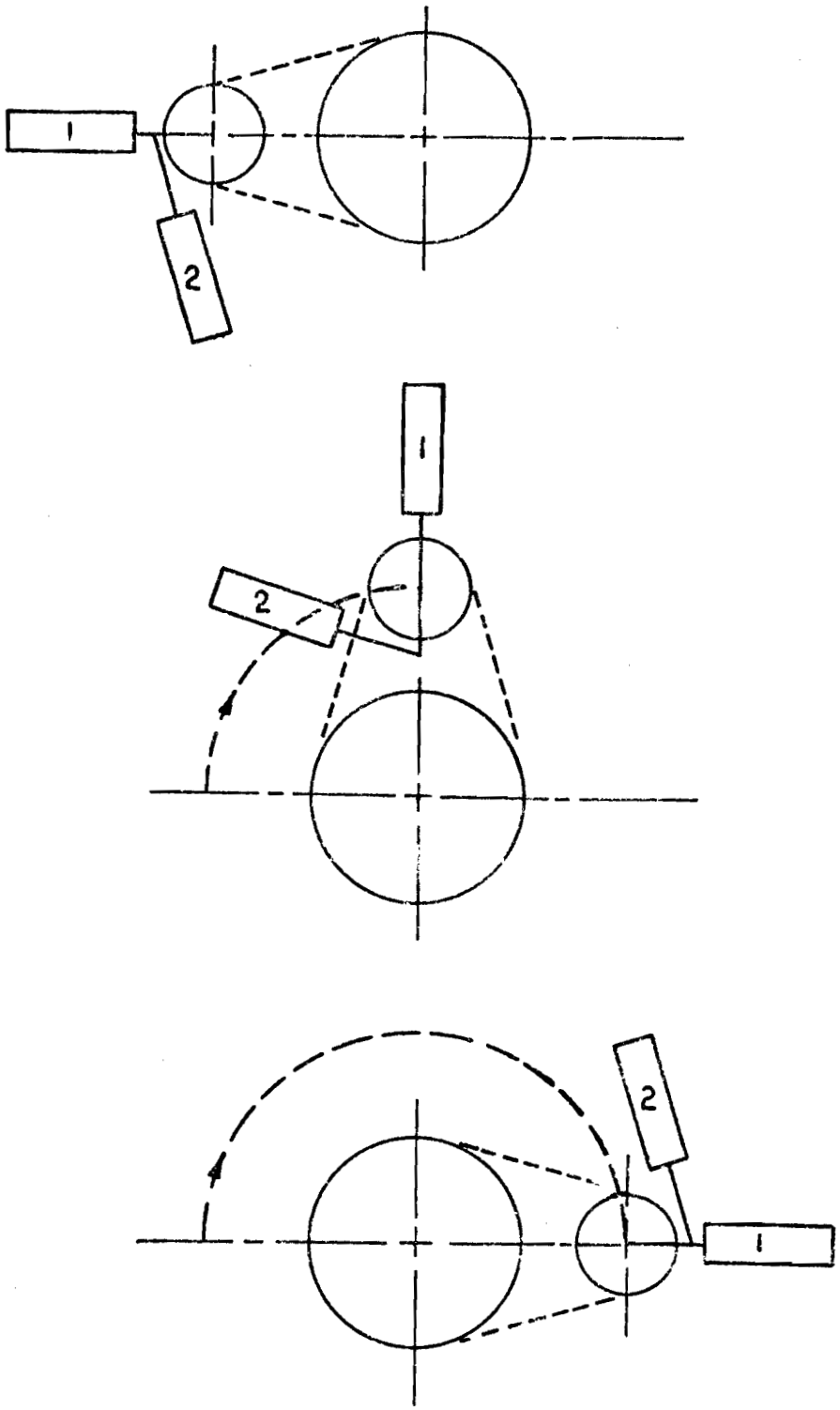

YAW DAMPER
OPERATION

FIGURE 2.5.2

purpose are available from Victor Fluid Power. As seen in Figure 2.5.1, the ratio between the machine in yaw and the rotation on the bell crank operating the shocks is 2:1. If the ratio were increased to 10:1 the bell crank would be rotating 10 times as fast thus perhaps eliminating the need for two shocks. It is felt that the time averaged damping could be considered constant. The monoshock concept needs further investigation. Both concepts discussed above are common to the WTG40E and WTG40M.

The cost breakdown for the dual shock absorber yaw damper is shown in Table 2.5.1.

TABLE 2.5.1

YAW DAMPER COST CHART

Item	Quantity	Cost
Sprocket 80B21	1	$ 15.20
Sprocket 80B42	1	40.35
Chain No. 80	24"	11.89
Bell Crank	1	2.00
Bell Crank Jounel	1	4.00
Yaw Damper Shaft 3/4" Diameter 12"	1	5.00
Bearings FAG 7304B	2	18.00
Gas Shock Absorber	2	90.00
TOTAL		$186.44

4.66/kw

CHAPTER VI - MAIN FRAME

The main frame is the chasis of the aloft system. Its greatest structural loading will be that of a beam subjected to a bending moment due to the weights of the components aloft. Because of its inherent simplicity, a multiweb box beam will be investigated. The pole matcher's two bearing surfaces will mate at the beams' webs. The web of the box beam also serves as the bed plate for the aloft systems. The aloft systems of the WTG40E and WTG40M differ in their speed transmission configuration as well as their energy converter. It was felt, therefore, that two different main frames had to be considered. Both, however, will be fabricated from glued and cleated marine plywood members. Outward turning longitudinals will add section to the flanges as well as to serve as attachment points for the nacelle parts. The nacelle, the covering for the entire aloft system, will be comprised of three major components; the spinner nacelle, the lower fixed nacelle, and the upper fixed nacelle. All the nacelle components will be glass reinforced plastic. The lower fixed nacelle will be bonded to the framing of the main frame for added stiffness.

Although the WTG40E and WTG40M main frames have different dimensions, the basic multiweb box beam will be used in both cases. The WTG40E which is the dimensionally larger of the two systems will be subject to greater wind loads.

The deflection in the main frame subjected to hurricane wind loading was calculated to be less than .001 inches. This was done

for the largest span between supports, in this case 60 inches. The calculated deflection in this case is well within the acceptable limits of plywood.

The maximum bending moment in the main frame was due to the combined weights aloft. This was calculated to be 72,000 in-lbs. The maximum stress was found in section AA as shown in Figure 2.6.1:

FIGURE 2.6.1

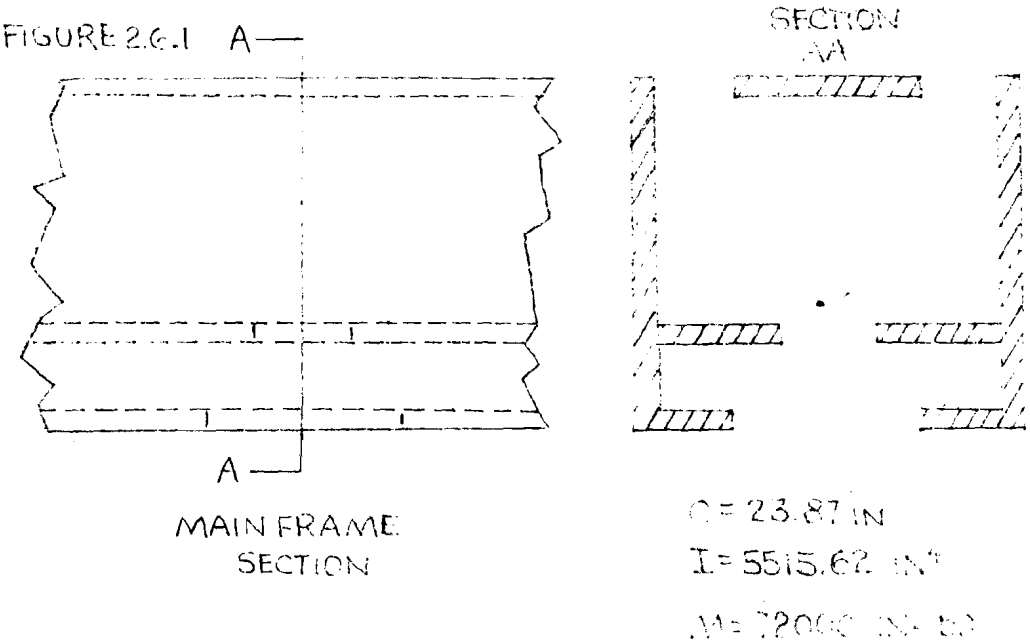

The following is a simple beam analysis of the main frame:

$$\sigma_{bending} = \frac{MC}{I} = 311.6 \text{ PSI}$$

This is well within $\sigma_{allowable}$ for plywood which is 2,000 PSI.

The crushing load at the skirt bearing due to hurricane wind loading was calculated to be 257 PSI. The allowable load applied to the plane perpendicular to the plys is 300 PSI. Therefore, the proposed

skirt bearing deck of one inch marine plywood is acceptable. All decks and bulkheads for the main frame will be constructed of one inch marine plywood and panel sections will be ½ inch marine plywood. The WTG40E and the WTG40M main frames and sub-assemblies are shown in Figures 2.6.3 and 2.6.4.

The estimated material costsare as follows:

WTG40E = $400

WTG40M = $250

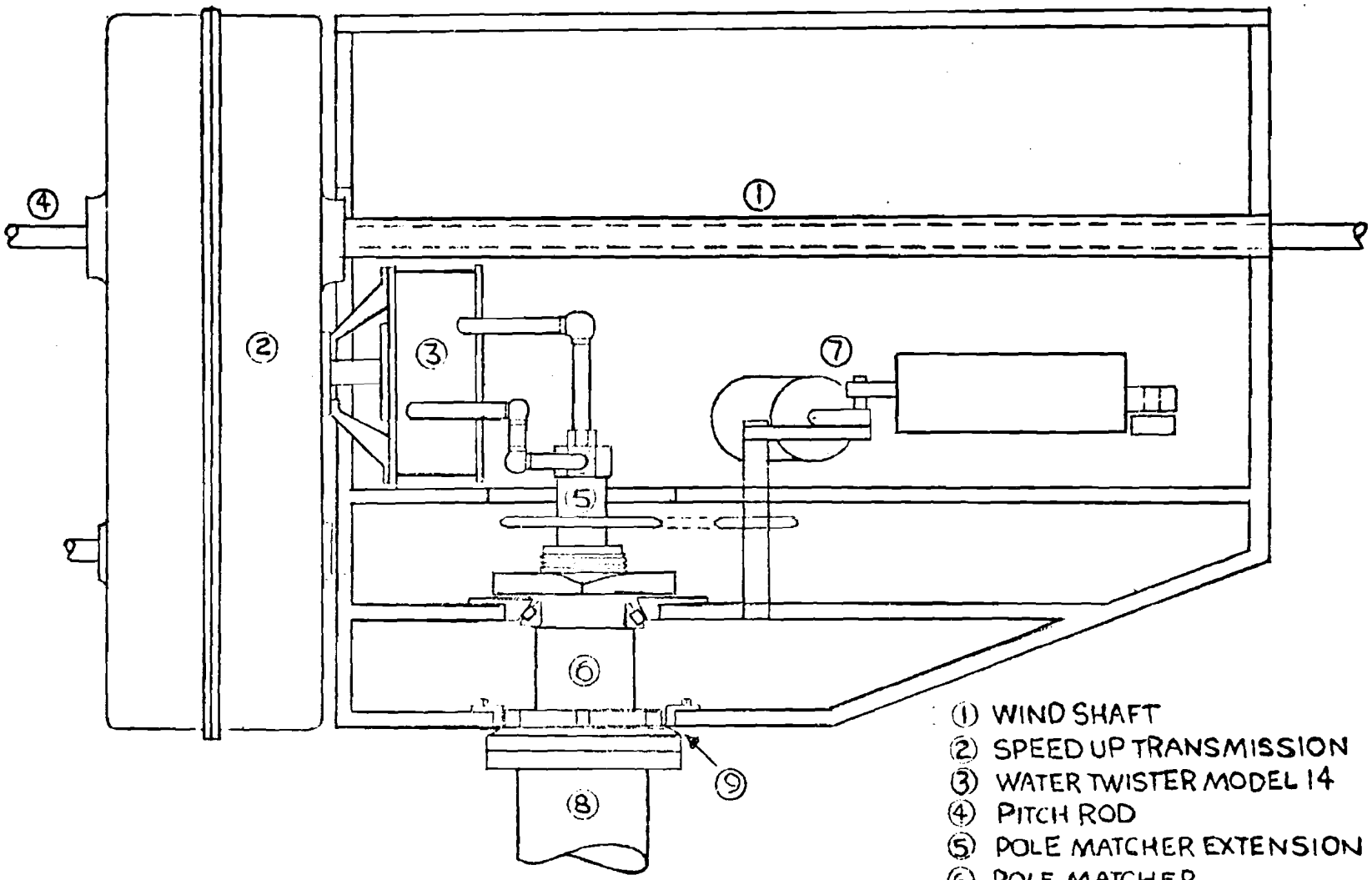

1. WIND SHAFT
2. SPEED UP TRANSMISSION
3. WATER TWISTER MODEL 14
4. PITCH ROD
5. POLE MATCHER EXTENSION
6. POLE MATCHER
7. YAW DAMPER
8. TOWER
9. SKIRT BEARING

FIGURE 2.6.3

WTG40M MAIN FRAME AND SUBASSEMBLY

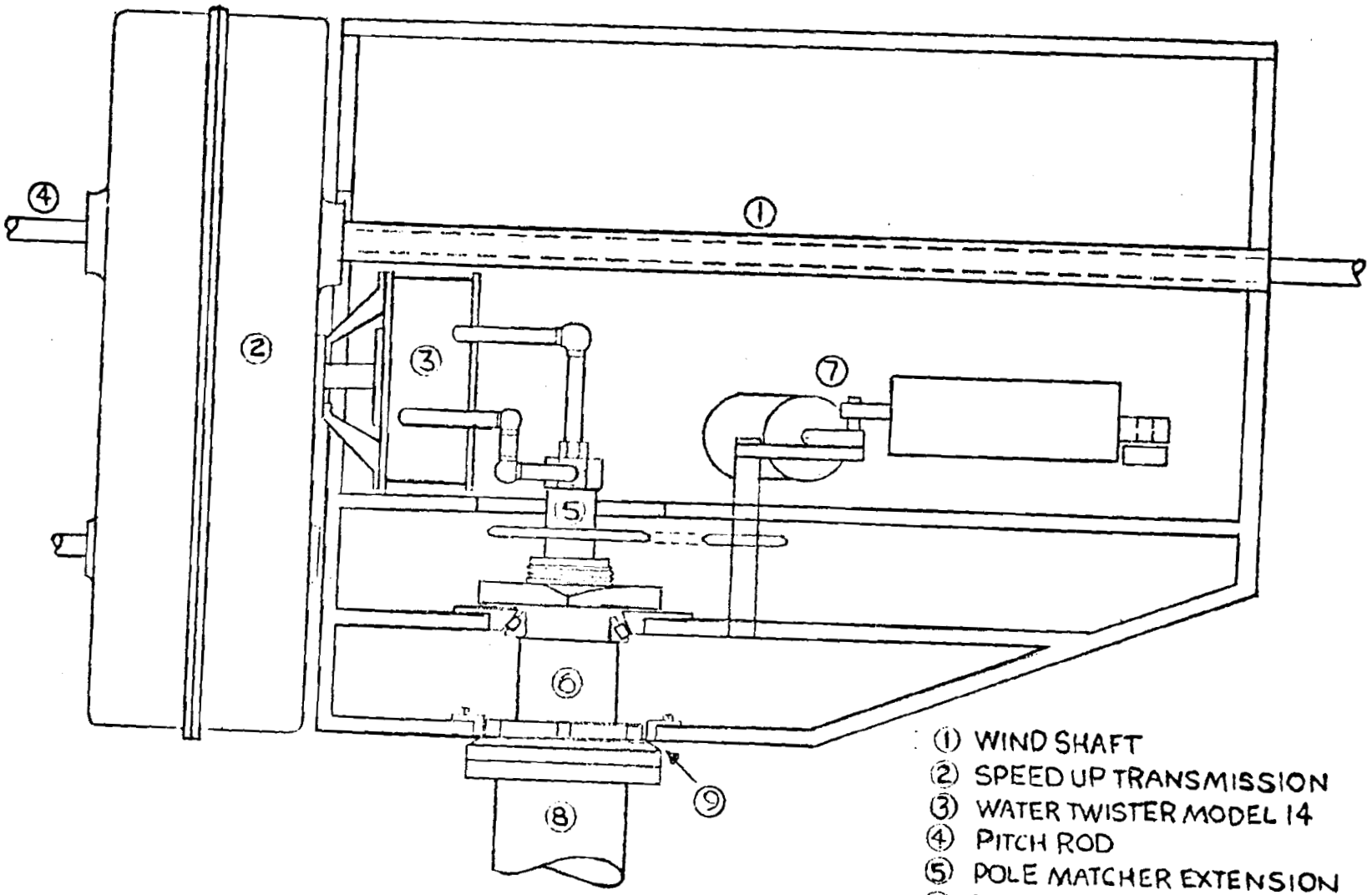

1. WIND SHAFT
2. SPEED UP TRANSMISSION
3. WATER TWISTER MODEL 14
4. PITCH ROD
5. POLE MATCHER EXTENSION
6. POLE MATCHER
7. YAW DAMPER
8. TOWER
9. SKIRT BEARING

IGURE 2.6.3

WTG40M MAIN FRAME AND SUBASSEMBLY

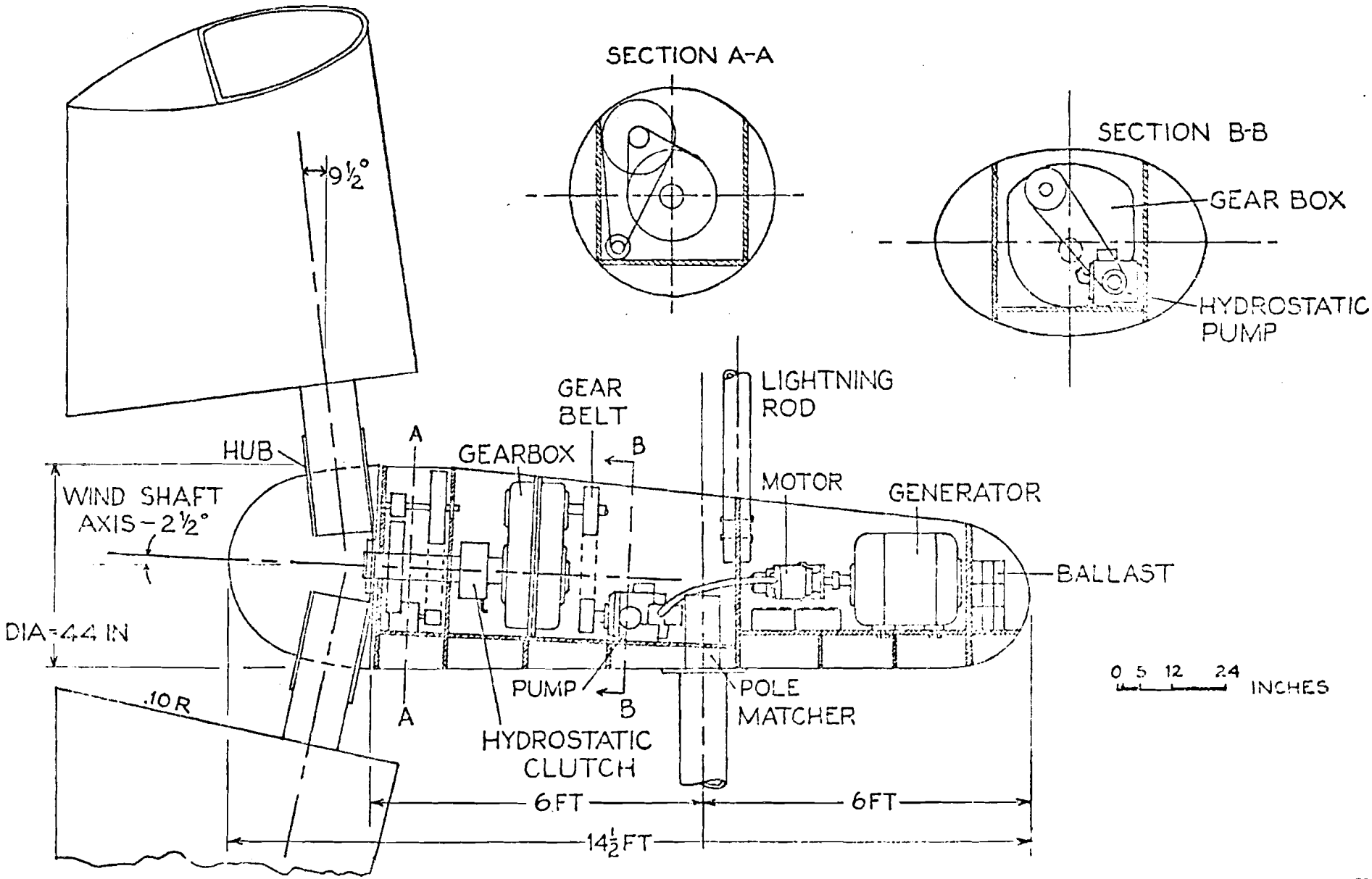

FIGURE 2.6.4

WTG-40E WITH ±7% SPEED VARIANT DRIVE: GENERAL ARRANGEMENT

CHAPTER VII.- SUPPORT STRUCTURE (Taken from work done in May, 1977 by Steven Bailey and Bruce A. Johnson)

The WTG40E and WTG40M support structures will be the same. Both systems will utilize a double-stayed steel pole mast, as shown in Figure 2.7.1. The steel mast is a ten-inch 3/8 inch wall pipe, 80 feet total length, with 8 feet inserted into the central footing, thus the tower height is effectively 72.0 feet above the ground. A total system weight of 4,000 pounds concentric down the pole and an overturning thrust of 10,000 pounds at the system's axis height can be accommodated by the pipe if stayed with three 1½ inch rod stays arranged at a 3:1 slope to the top of the pole top. The 10,000 pounds axial load corresponds to the brute force on the two blades caught flat to the wind plus the brute drag force of the projected area of the nacelle for the WTG40E - a conservative loading - and this for a wind speed of 165 miles per hour.

The pole is subdivided into three lengths, section ends fitted with standard steam pipe flanges, to facilitate movement of the pole to the site.

The stays are fitted with standard swaged devices and turnbuckle ends and are set up with a torque wrench to design tension.

It has been estimated that the stayed pole mast and support structure can be put in place for a total cost of $3,163.55. The cost breakdown is shown in Table 2.7.1. Figure 2.7.2 shows the WTG40E atop the support structure.

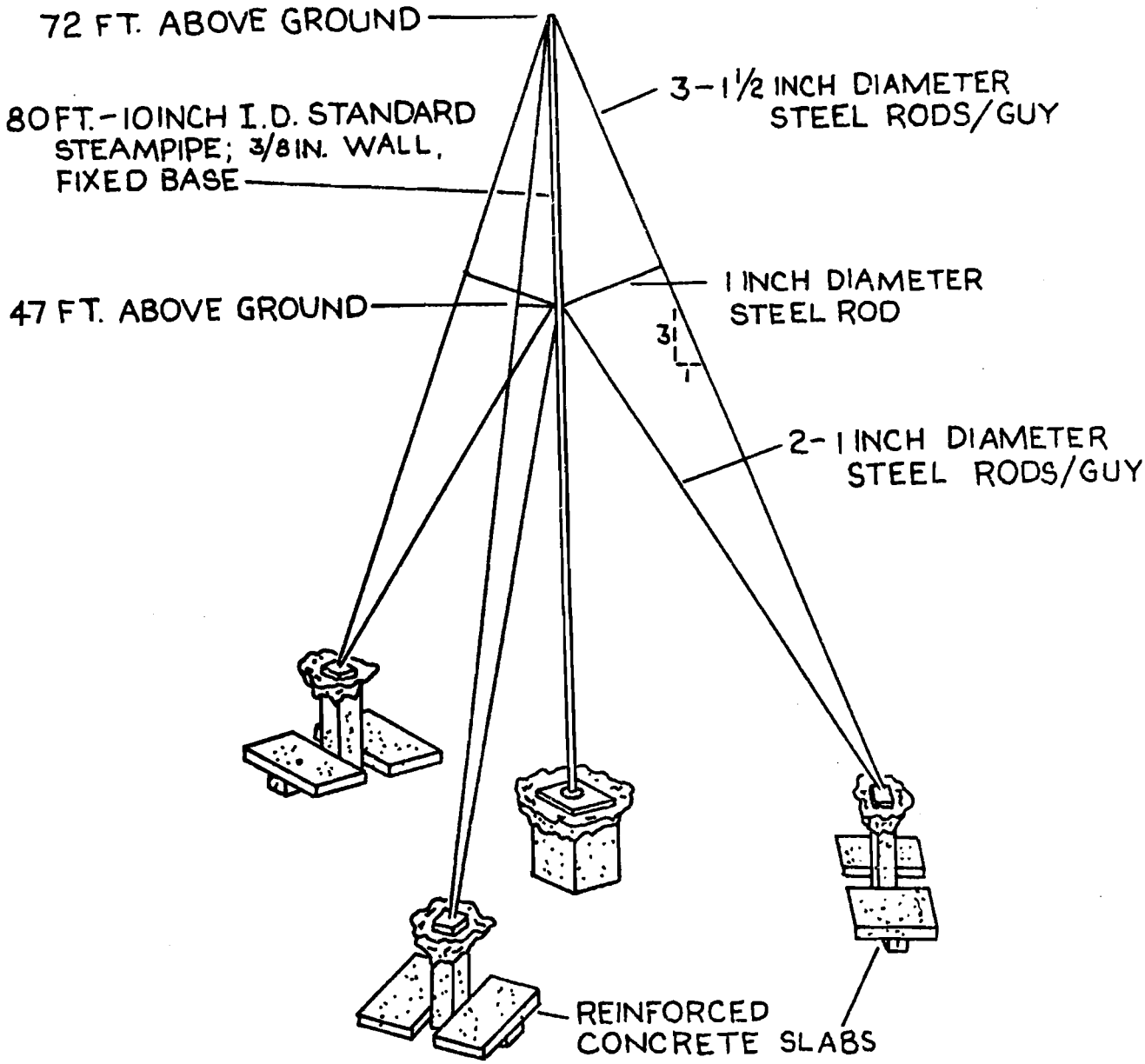

DOUBLE-STAYED STEEL POLE MAST

FIGURE 2.7.1

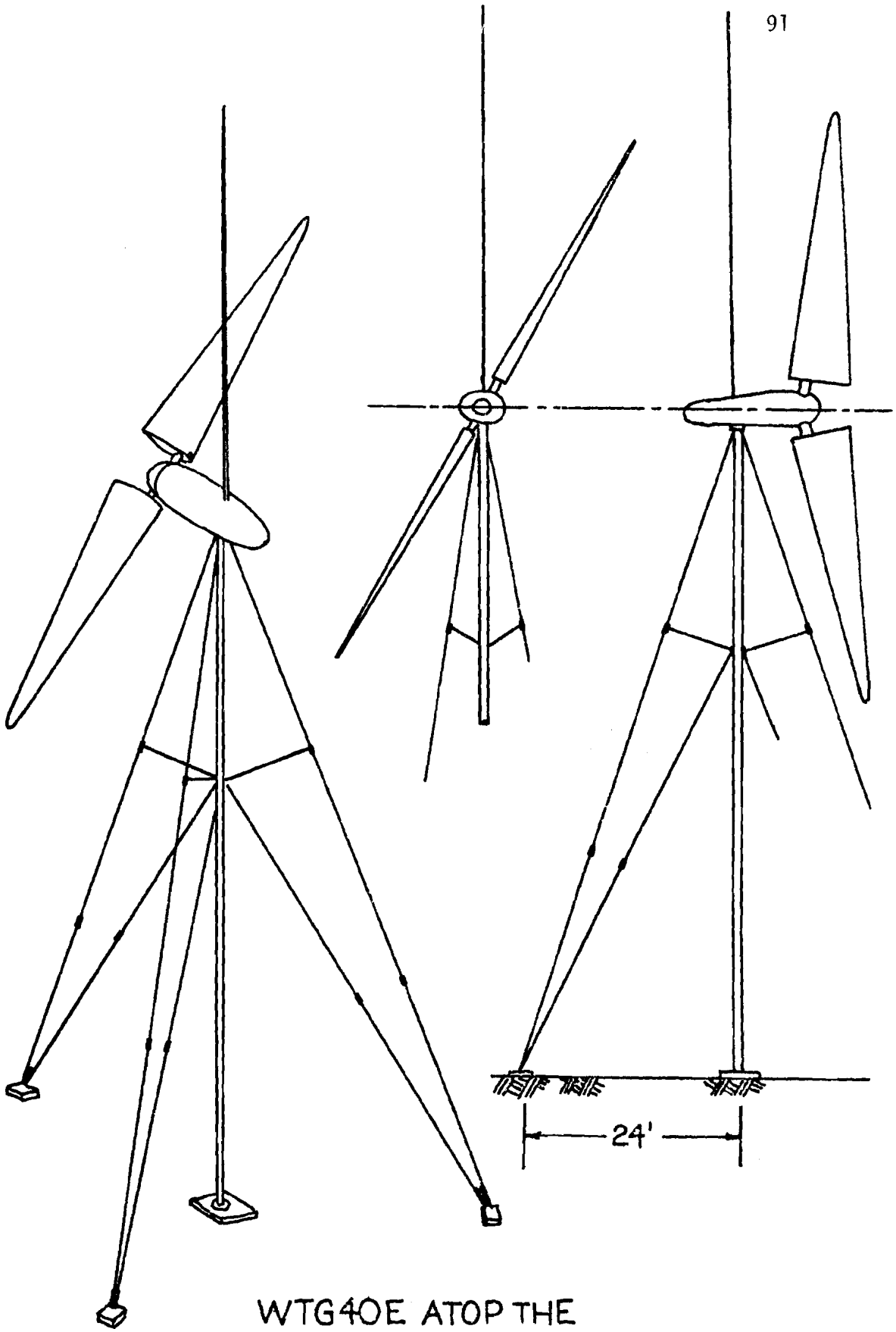

FIGURE 2.7.2 WTG40E ATOP THE DOUBLE STAYED POLE MAST

TABLE 2.7.1

SUPPORT STRUCTURE, CHARACTERISTICS AND COST

	Unit
Tower Material:	
10" I.D. Standard Steampipe at 40.48 lbs/ft	
Tower Height = 80 ft	
Unit Price = $.387/lb; quantity price = $.277/lb	$1,253.26
Guy Wires:	
Number Required = 6	
Working Load = 7.51 kps; Length = 74.11 ft	
Use 3/4" diameter, 6x19 IWRC, IPS Guys	
Unit Price = $.94/ft; quantity price = $.85/ft	
Open Swage Socket Cost = $19.30; Thimble Cost = $4.45	$ 560.48
Center Footing:	
Size: 43" x 43" x 9"	
Volume: .3567 yards at $25/yard	$ 8.92
Turnbuckles:	
Number Required = 3	
Size: 3/4 = Diameter Jaw and Jaw, 24" takeup	
Unit Price = $22.53	$ 67.59
Corner Footing:	
Number Required = 3	
Unit Cost = $91.02	$ 273.06
BASIC MATERIAL COST	$2,163.55
TOTAL ESTIMATED LABOR COST	$1,000.00
TOTAL ESTIMATED	$3,163.55

CHAPTER VIII - SUMMARY

Table 2.8.1 shows the complete cost breakdown of both machines, the WTG40E and WTG40M. The WTG40E is the most expensive to produce, but the product delivered (240/480 volts 60hz, 3 phase) is more versatile than the hot water delivered by the WTG40M. Of course, when hot water is the desired end product the WTG40M would be the better selection. In the case of the dairy and poultry farms briefly discussed in Part I, the WTG40M would appear to be the best selection.

Up to this point, two wind systems have been identified and major components have been designed and priced. It is now possible to superimpose the two systems onto different wind regimes with the use of the Wiebull Distribution discussed in Part I and gain some knowledge as to their productivity. This will be investigated in Part III on economics.

TABLE 2.8.1

COMPARISON COST

OF THE WTG40E AND WTG40M

	WTG40E 51' Dia., 75' axis height, 2 blades, 94 wind shaft HP	WTG40M 39.5' Dia., 75' axis height, 2 blades, 56 wind shaft HP
	COST	COST
Support Structure in Place	$3,000	$3,000
One Pair of Blades	1,500	1,000
Pole Matcher and Subassembly	376	395
Main Frame	400	250
Speed Up Transmission	4,065	645
Yaw Damper	186	186
Nacelle	400	400
Pitching Mechanism	300	300
Hub and Bearing	400	400
Energy Converter	1,455	800
Assembly Labor Profit Installation Franchise Cost	9,000	5,500
TOTAL	$21,082	$12,876
	527/kw	322/kw

PART III - ECONOMIC ANALYSIS

PART III

THE ECONOMICS OF WIND POWER

CHAPTER I - INTRODUCTION

The successful growth of the wind power industry will be based on many complex and inter-relating economic, social, and political conditions. As shown in Part II, wind systems have high initial costs, $21,082 for the WTG40E and $12,876 for the WTG40M. This represents the second largest investment a home owner is likely to make,the house being the largest. Therefore, in the initial growth stages the industry will be sensitive to the strength of the economy and to political and social attitudes. Consumers will be hesitant to incur debts to buy wind systems unless the economic conditions are favorable, i.e., full employment, high wages without double digit inflation, and adequate supplies of mortgage money available at reasonable interest rates. Although wind power represents a vast resource of renewable energy, it still must compete in the energy market against the more conventional sources of energy such as oil, coal, natural gas, and nuclear.

The success of wind power as a viable alternative is closely tied to current as well as future prices of other sources of energy.

Nuclear power, thought to be energy too cheap to meter in the 1950's when nuclear energy was still in the developmental stages, has run into many technical and environmental problems sending the cost of producing power up at alarming rates.

The Federal Government plans to double the output of coal by the late 1980's. It is estimated that doubling the use of coal would cause over a 5% increase of sulphur dioxide emissions by 1985. In the light of the present condition of the rail system in the United States, transportation of such massive amounts of coal by rail could cause large capital expenditures to improve the rail system. The coal industry also has a history of severe labor problems as witnessed just recently. Wild-cat strikes have made output undependable. The labor problems of the coal industry are directly related to working conditions. To improve the working conditions to an acceptable level would cost a great deal, thus increasing the price of coal. Oil, quickly dwindling, has tripled in price since 1973. With all the supply and demand factors considered, OPEC crude oil could cost $25 to $31 a barrel by 1985.[6] The natural gas prices have been low in relation to other sources of energy, due largely to price controls keeping the price artificially low. If Federal price controls are relaxed, the price of natural gas will increase extremely rapidly in relation to all other energy sources.

CHAPTER II - WIND POWER AS A VIABLE ALTERNATIVE

If wind systems are considered as fuel savers, the cost of the conventional fuel that the wind system saves can be considered as positive cash flow to offset the investment cost. Because of high initial costs, most residential and agricultural wind systems will probably be financed with little or no down payment. After equipment

maintenance charges are included, the cash outflows are approximately constant over the useful life of the wind system. On the other hand, fuel prices have not remained constant but have inflated with time and continuing escalation is expected. The annual price escalation rate of most fuels is about 10%. Therefore, the cash flow required to acquire fuel can be expected to grow at some price escalation rate. Normally the annual cash flow will be negative at the time of investment, then turn positive at some future date.

Economic viability can be said to be achieved if the sum of the cash flow turns positive within a reasonable time. This type of breakeven occurs when:

$$\sum_{K=1}^{n} \left\{ S(1+i_f)^{K-1} - \left[\frac{P_{net}}{DFA(i_m,N)} + M(1+i_o)^{K-1} \right] \right\} = 0 \qquad 3.1.1$$

Where:

S = Initial Fuel Savings in Dollars

i_f = Annual Escalation Rate of Fuel Price

n = Year Breakeven Occurs

P_{net} = Net Purchase Price of the Wind System

DFA = Discount Factor of an Annuity at i_m Interest and N Periods

i_m = Annual Mortgage Interest Rate

N = Length of Mortgage

M = Annual Maintenance Cost

i_o = General Price Escalation Rate of Economy

Two wind systems were developed in Part II: the WTG40E costing $21,082 and the WTG40M costing $12,876. Those two systems are used in this economic analysis. Using the tools developed in Part I, one is capable of picking any site for which wind data is available and determining the annual productivity of a machine at that site, thereby determining the fuel saving(S). In this investigation, three sites will be analyzed for wind power use; an "average" duplex residence in the Boston area, a dairy farm of 100 cows in Madison, Wisconsin, and a poultry farm of 50,000 broilers in Hartford, Connecticut. The Boston residence will use the WTG40E while the dairy and poultry farms will use the WTG40M. Figures 3.1.1 and 3.1.3 show the wind system porduction vs. load demand at the three sites. As the figures show, some sort of auxiliary heat will be required during the fall and winter months particularly in the Hartford and Madison cases. To meet the fall and winter demands by wind machines would create an enormous surplus in the summer. It is possible from a marketing standpoint, to tailor, within reason, a wind system for each site. The WTG40E on the Boston site was much too large for one residence, therefore, it is being used to heat a duplex. This represents a tailoring of needs to meet the wind system. In the case of residential sites, this appears to have many advantages. Wind systems could be designed to heat housing complexes.

The three systems were compared to the amount saved in relation to current electric rates and current heating oil rates. The fuel savings of the Boston system saved $2,164.50 worth of electricity at

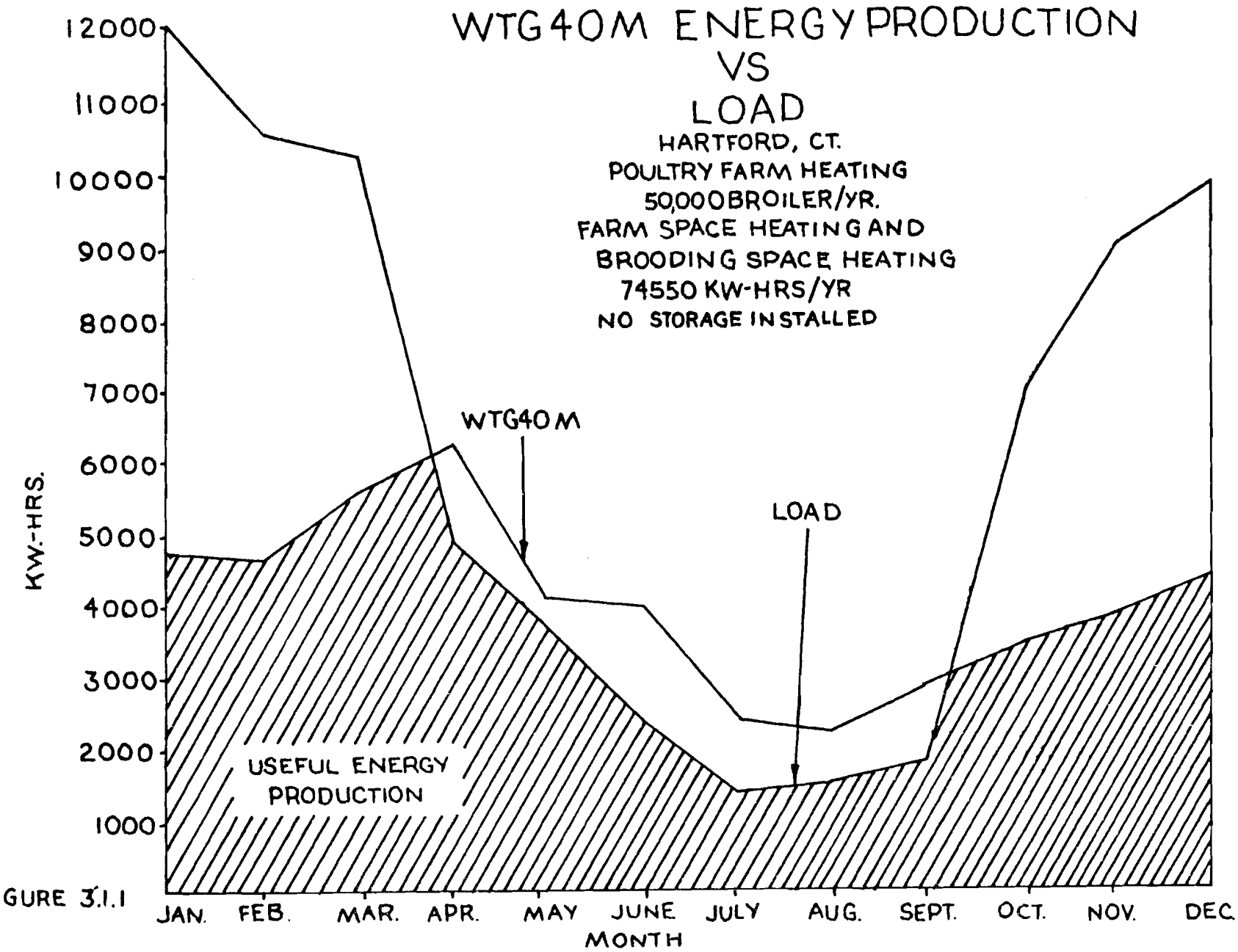
WTG40M ENERGY PRODUCTION
VS
LOAD
HARTFORD, CT.
POULTRY FARM HEATING
50,000 BROILER/YR.
FARM SPACE HEATING AND
BROODING SPACE HEATING
74550 KW-HRS/YR
NO STORAGE INSTALLED
WTG40M
LOAD
USEFUL ENERGY
PRODUCTION
KW.-HRS.
12000
11000
10000
9000
8000
7000
6000
5000
4000
3000
2000
1000
JAN.
FEB.
MAR.
APR.
MAY
JUNE
JULY
AUG.
SEPT.
OCT.
NOV.
DEC.
MONTH

FIGURE 3.1.1

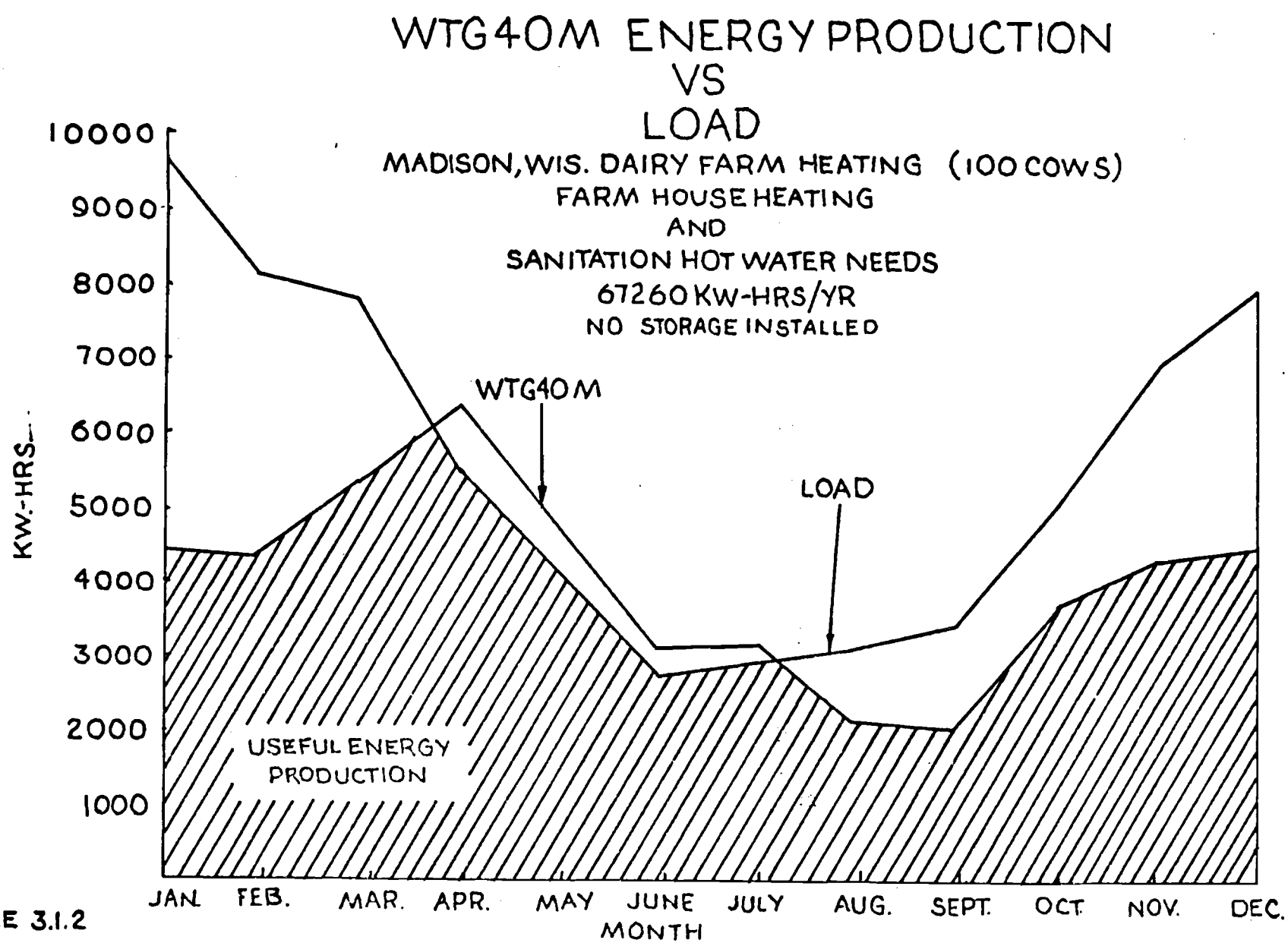
WTG40M ENERGY PRODUCTION
VS
LOAD
MADISON, WIS. DAIRY FARM HEATING (100 COWS)
FARM HOUSE HEATING
AND
SANITATION HOT WATER NEEDS
67260 KW-HRS/YR
NO STORAGE INSTALLED
WTG40M
LOAD
USEFUL ENERGY PRODUCTION
KW-HRS
10000
9000
8000
7000
6000
5000
4000
3000
2000
1000
JAN.
FEB.
MAR.
APR.
MAY
JUNE
JULY
AUG.
SEPT.
OCT.
NOV.
DEC.
MONTH

FIGURE 3.1.2

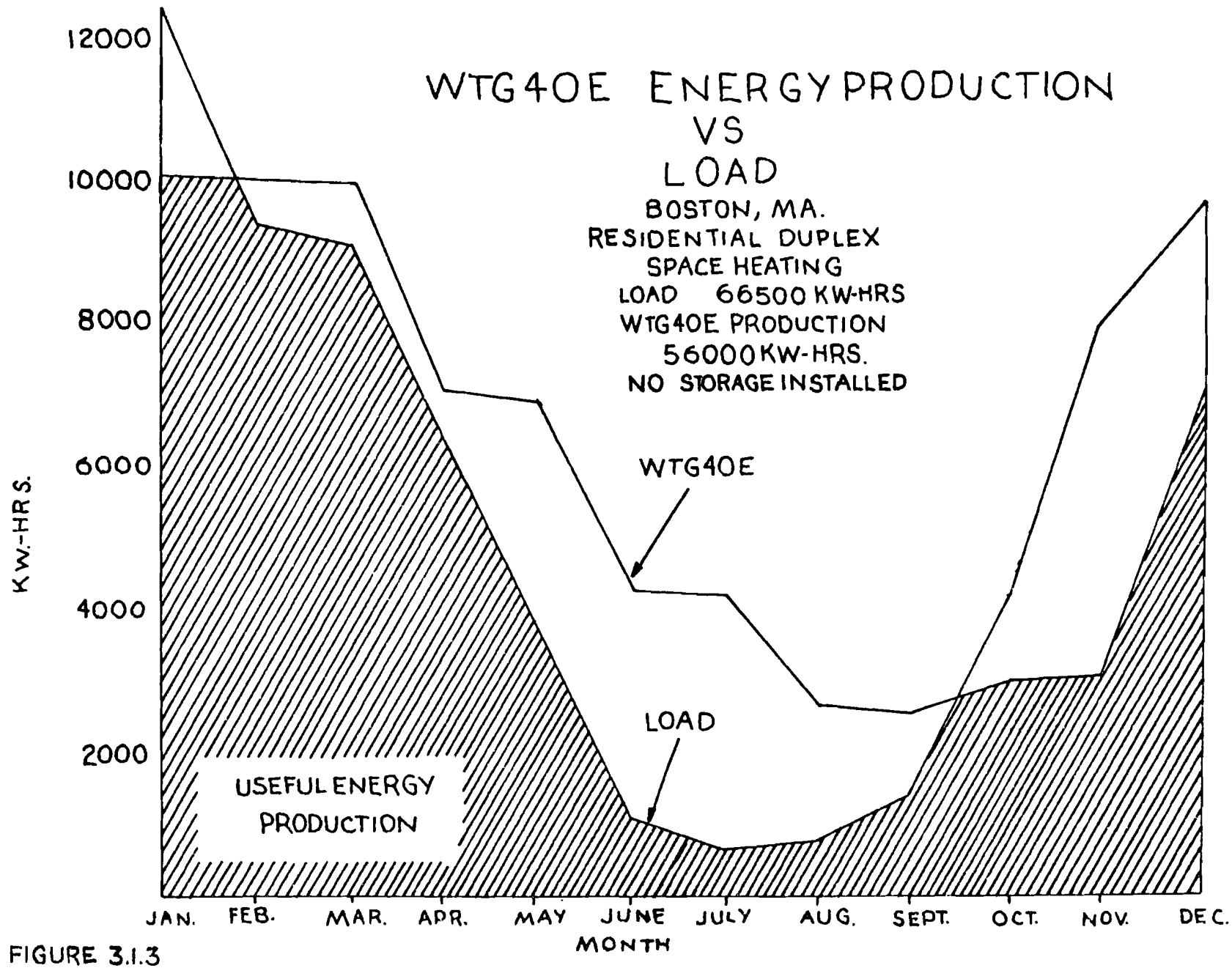
WTG40E ENERGY PRODUCTION
VS
LOAD
BOSTON, MA.
RESIDENTIAL DUPLEX
SPACE HEATING
LOAD 66500 KW-HRS
WTG40E PRODUCTION
56000 KW-HRS.
NO STORAGE INSTALLED
WTG40E
LOAD
USEFUL ENERGY
PRODUCTION
KW.-HRS.
12000
10000
8000
6000
4000
2000
JAN.
FEB.
MAR.
APR.
MAY
JUNE
JULY
AUG.
SEPT.
OCT.
NOV.
DEC.
MONTH

FIGURE 3.1.3

a price of 3.7 cents per kw-hr. When compared against heating with oil, it saved \$1,003.26 at a price of 51 cents per gallon (S_E=\$2,164.50 and S_o=\$1,003.26). The Madison system showed a fuel savings of \$1,387.50 worth of electricity at a price of 2.7 kw-hr, when compared to heating with oil it saved \$793.17 at a price of 51 cents per gallon (S_E=\$1,387.50 and S_o=\$793.17). The Hartford system showed a fuel savings of \$1,563.25 worth of electricity at a rate of 3.7 cents per kw-hr (S_E=\$1,563.25). When compared to heating with oil it saved \$724.59 at a price of 51 cents a gallon (S_o=\$724.59).

No significant storage has been installed in any of these three systems. It is quite clear from an inspection of Figure 3.1.3 that even a modicum of hot water or hot rock storage, capable of accepting the surplus produced between February and September, could probably, economically, fill the September to February deficit.

The maintenance will differ for the two wind systems. The WTG40M maintenance schedule will include an oil change and inspection of the overall system once a year at a cost of \$100 the first year. In approximately the twelth year, an overhaul of the transmission at a cost of \$200 will be necessary. This overall charge can be spread over the system's life, which will be assumed to be 25 years. Therefore, the annual maintenance fee will be roughly \$108. The WTG40E maintenance schedule will include an oil and filter change once a year at a cost of \$250. The gear box and hydrostatic transmission will be assumed to last well over 25 years and the gear belt will have to be replaced at seven year intervals at a cost of \$195. This will total

approximately $585 over the life of the system; thus, annual maintenance cost (M) will be roughly $273.

The economic characteristics of the system are shown in Table 3.1.1 and used in Equation 3.1.1 and the results are shown in Figures 3.1.4 and 3.1.5. Figures 3.1.4 and 3.1.5 essentially represent the culmination of this entire investigation.

The question still remains, "Can wind power make a significant impact on the energy market?" As shown in Figure 3.1.5, the wind systems under investigation at three sites will break even before the eighth year. The WTG40M's at Madison and Hartford break even at 5.5 years and 3.5 years respectively. This can make a significant impact on the energy market. The WTG40E in Boston is still economical at a break even point of 7.5 years, however, its 60 cycle 3 phase output could be put to much better use than heating. Perhaps generating power for use in the industrial sector would be more appropriate for the WTG40E. As shown in Figure 3.1.4 where the systems are compared with heating with oil the WTG40M will still make inroads into the energy market but the WTG40E break even of 17 years is questionable. However, how much oil will be left in 17 years(1995)? What price tag can one put on the conserving of natural resources?

TABLE 3.1.1

ECONOMIC CHARACTERISTICS

AS COMPARED TO HEATING OIL

WTG40E At Boston	WTG40M At Madison	WTG40M At Hartford
S = \$1,003.26	S = \$793.17	S = \$724.59
i_f = 10%	i_f = 10%	i_f = 10%
P_{net} = \$21,082	P_{net} = \$12,876	P_{net} = \$12,876
N = 25	N = 25	N = 25
i_o = 6%	i_o = 6%	i_o = 6%
i_m = 8%	i_m = 8%	i_m = 8%
M = \$273	M = \$108	M = \$108

AS COMPARED TO ELECTRICITY

WTG40E At Boston	WTG40M At Madison	WTG40M At Hartford
S = \$2,164.50	S = \$1,387.50	S = \$1,563.25
1_f = 10%	i_f = 10%	i_f = 10%
P_{net} = \$21,082	P_{net} = \$12, 876	P_{net} = \$12,876
N = 25	N = 25	N = 25
i_o = 6%	i_o = 6%	i_o = 6%
i_m = 8%	i_m = 8%	i_m =8%
M = \$273	M = \$108	M = \$108

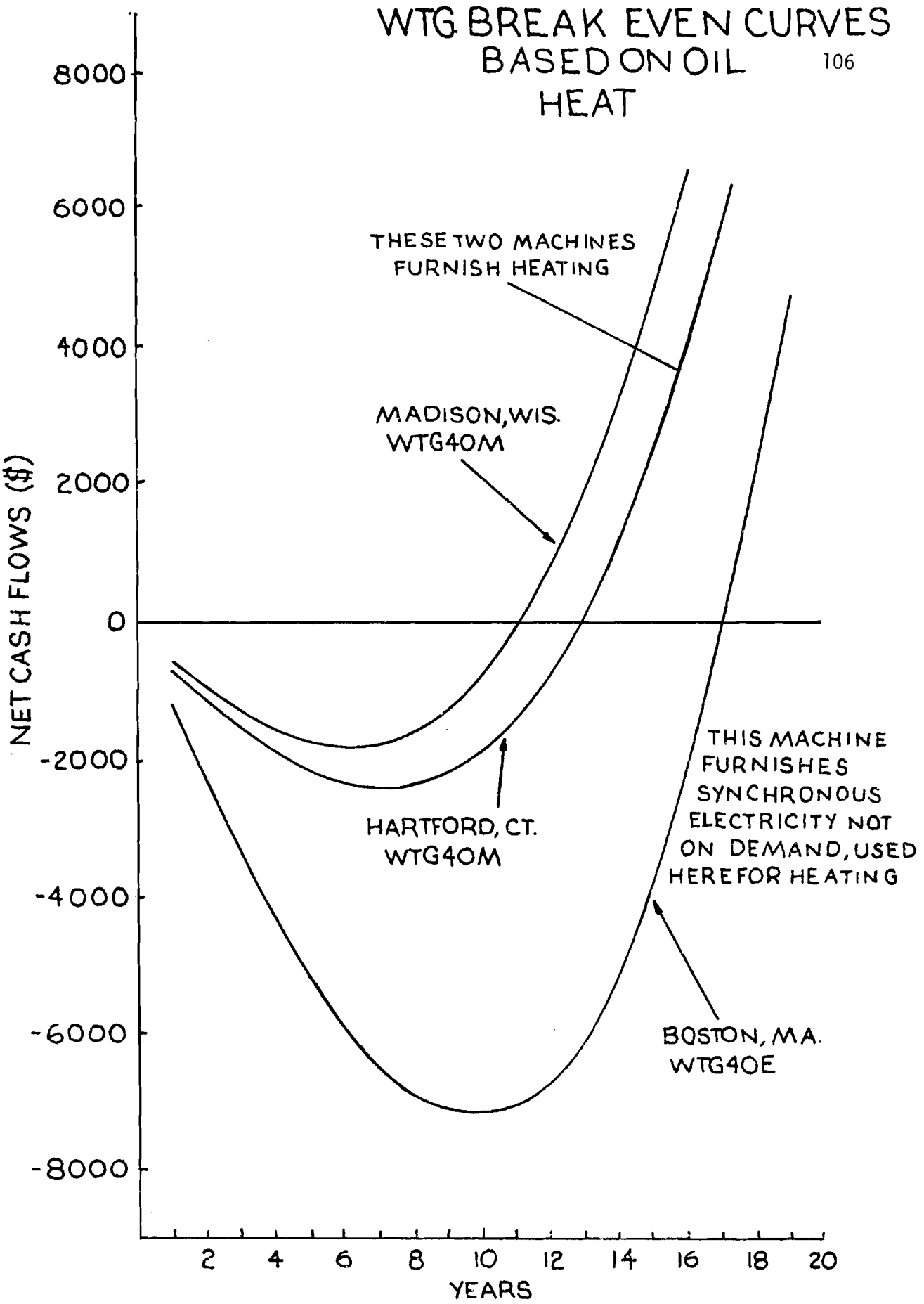
WTG BREAK EVEN CURVES
BASED ON OIL
HEAT
8000
6000
4000
2000
0
-2000
-4000
-6000
-8000
NET CASH FLOWS ($)
THESE TWO MACHINES
FURNISH HEATING
MADISON, WIS.
WTG40M
HARTFORD, CT.
WTG40M
THIS MACHINE
FURNISHES
SYNCHRONOUS
ELECTRICITY NOT
ON DEMAND, USED
HEREFOR HEATING
BOSTON, MA.
WTG40E
2
4
6
8
10
12
14
16
18
20
YEARS

FIGURE 3.1.4

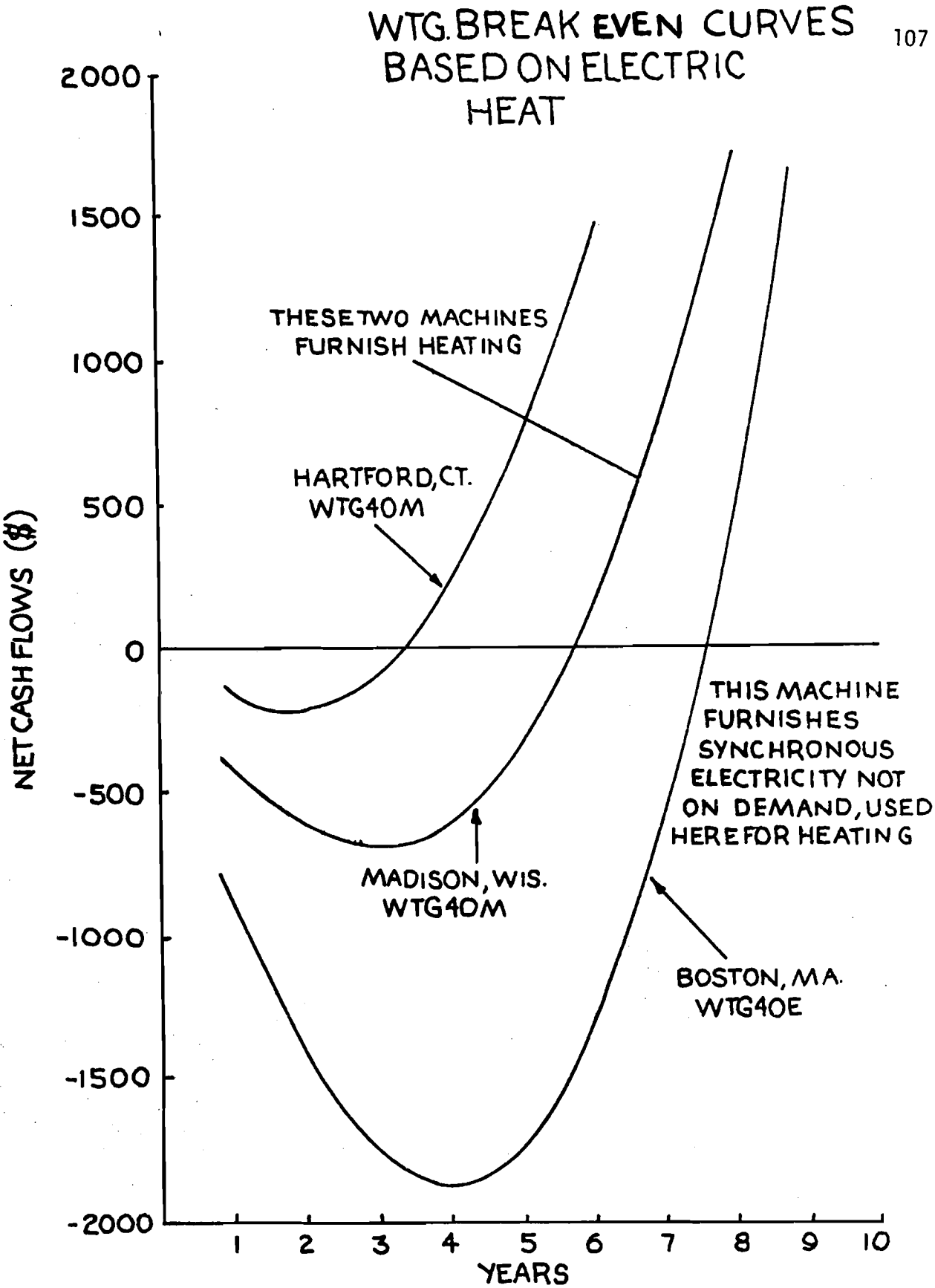
WTG. BREAK EVEN CURVES
BASED ON ELECTRIC
HEAT
2000
1500
1000
500
0
-500
-1000
-1500
-2000
NET CASH FLOWS ($)
THESE TWO MACHINES
FURNISH HEATING
HARTFORD, CT.
WTG40M
MADISON, WIS.
WTG40M
THIS MACHINE
FURNISHES
SYNCHRONOUS
ELECTRICITY NOT
ON DEMAND, USED
HEREFOR HEATING
BOSTON, MA.
WTG40E
1
2
3
4
5
6
7
8
9
10
YEARS

FIGURE 3.1.4

CONCLUSION

In conclusion, wind power at its present stage of development must make initial entry into the energy market as a fuel saver. However, once the wind power industry becomes established, a significant step will have been taken towards making the United States energy self-sufficient by the year 2000. It is felt that this investigation has clearly demonstrated wind power as an economical source of energy. Furthermore, the two wind systems developed in this report are by no means the final answer in economical wind system design; as the industry gears up, even more economic designs will be sure to follow. Although the wind power industry is still in its infancy, the initial public reaction has been favorable.

APPENDICES

APPENDIX I

NOMENCLATURE

M = Mass

ρ = Density of Air

V = Velocity at Rotor

A = Area of Rotor

K.E = Kinetic Energy

V_1 = Upstream Velocity

V_2 = Downwind Velocity

P = Power

P_{max} = Theoretical Maximum Power

C_p = Power Coefficient

X = Tip Speed Ratio

R = Radius of Wind Wheel

Ω = Angular Velocity

K = Weibull Shape Parameter

C = Weibull Scale Parameter

V_o = Mimimum Expected Velocity

σ = Standard Deviation About the Mean Wind Speed

$\overline{V}$ = Mean Wind Speed

Γ = Gamma Function

TCI = Number of Hours Cut-in Wind Speed is Exceeded

TR = Number of Hours Rated Wind Speed is Exceeded

TCO = Number of Hours Cut-out Wind Speed is Exceeded

V_r = Rated Wind Speed

OPT = Optimum Blade

LCLT = Linear Cord Linear Taper Blade

LCZT = Linear Cord Zero Taper Blade

CCZT = Constant Cord Zero Taper Blade

CT = Constant of Conversion .001356

KW = Kilowatt

HR = Hour

YR = Year

RV = Rated Wind Velocity

CIV = Cut-in Wind Velocity

PF = Plant Factor

FT = Feet

MPH = Miles Per Hour

HP = Horsepower

RPM = Revolutions Per Minute

C_t = Thrust Coefficient

LBS = Pounds

M_{yaw} = Gyroscopic Moment Induced in Yaw

I_Z = Moment of Inertia of the Wind Wheel About the Axis of Rotation

ψ = Maximum Yaw Rate

M = Bending Moment

C = Distance to Extreme Fiber

I = Moment of Inertia

PSI = Pounds Per Square Inch

S = Initial Fuel Savings in Dollars

i_f = Annual Escalation Rate of Fuel Price

n = Year Breakeven Occurs

P_{net} = Net Purchase Price of the Wind System

DFA = Discount Factor of an Annuity

i_m = Annual Mortgage

N = Length of Mortgage

M = Annual Maintenance Cost

i_o = General Price Escalation Rate of Economy

APPENDIX II

PROGRAM WIND

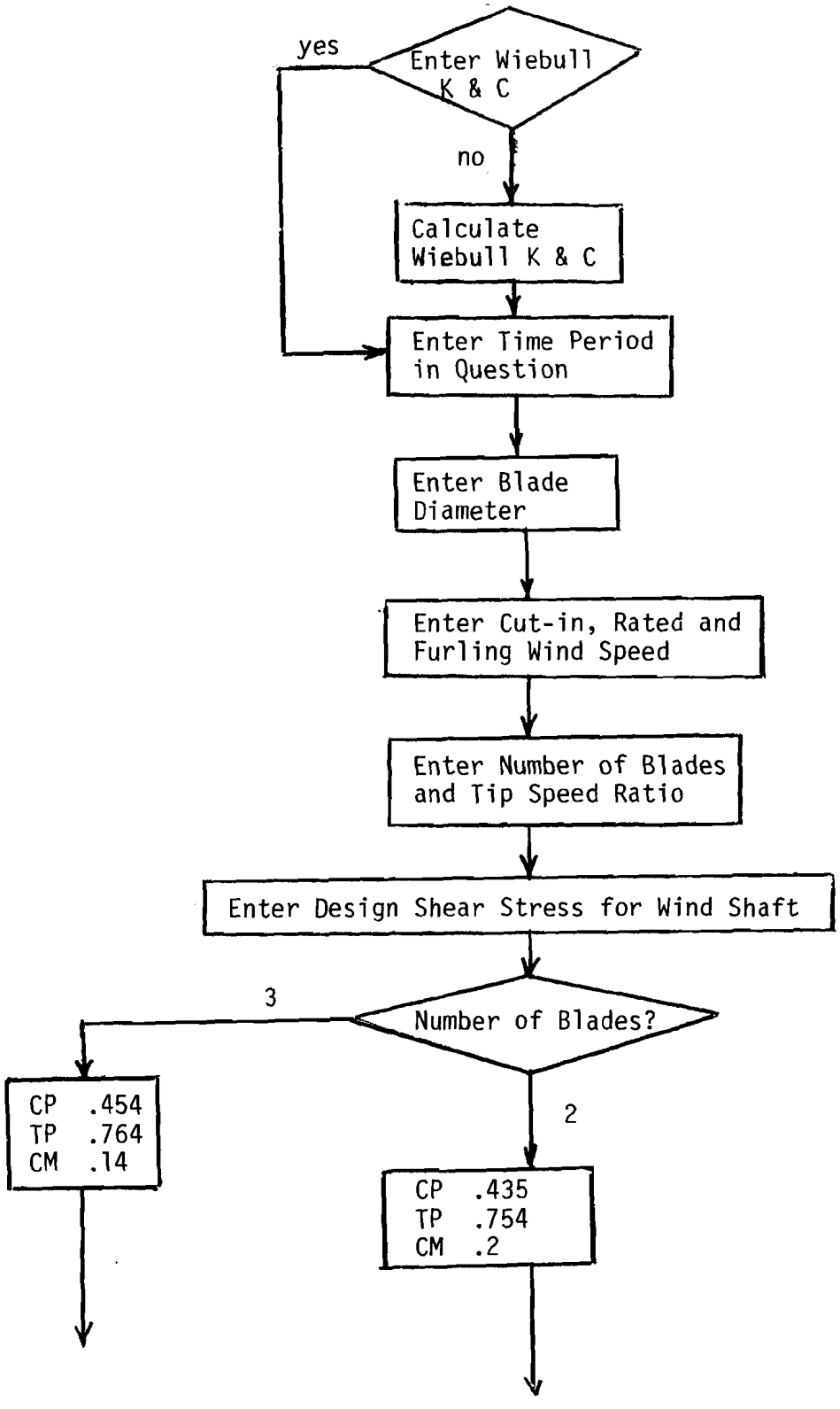

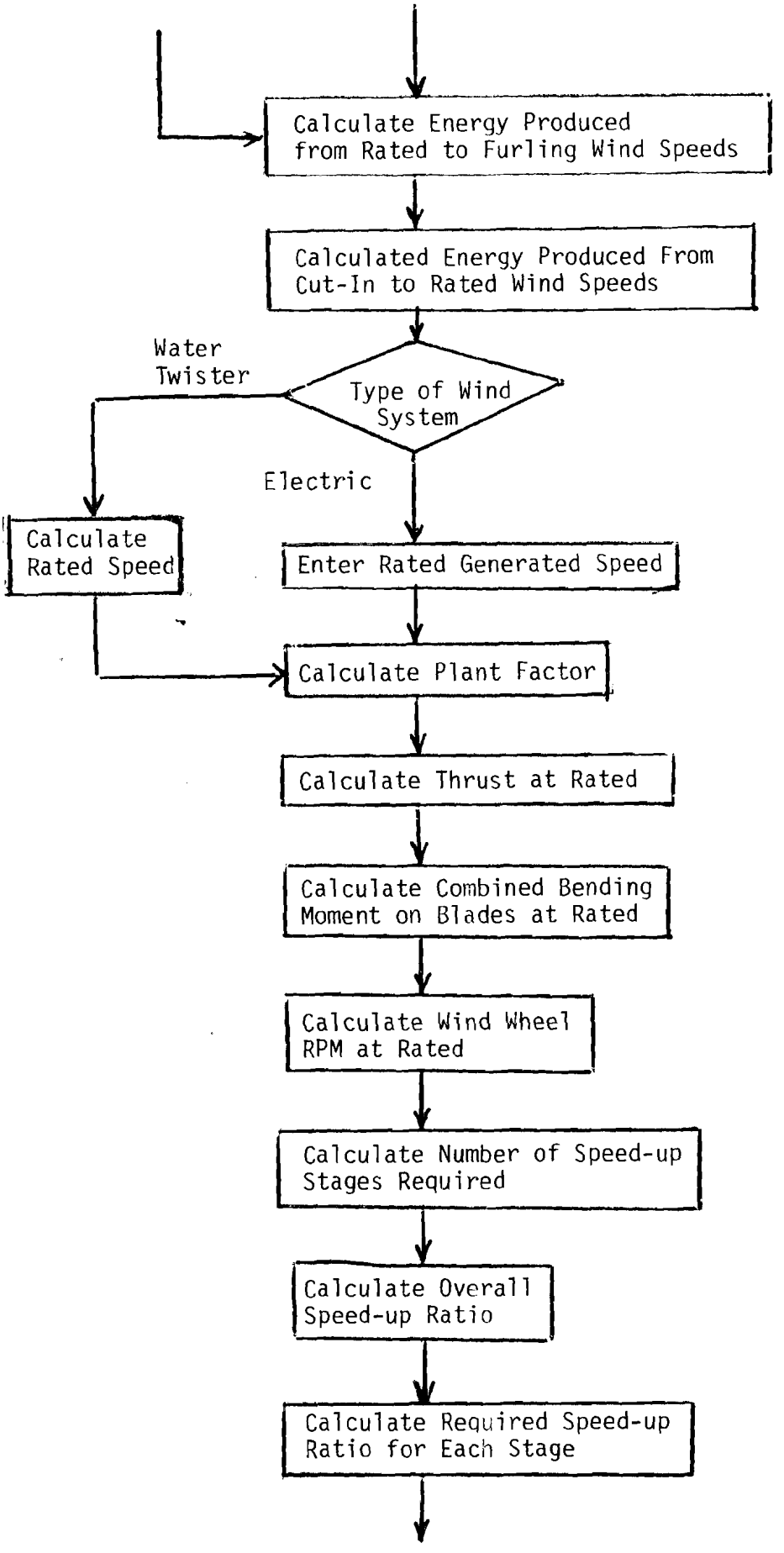
Calculate Energy Produced from Rated to Furling Wind Speeds
Calculated Energy Produced From Cut-In to Rated Wind Speeds
Water Twister
Type of Wind System
Electric
Calculate Rated Speed
Enter Rated Generated Speed
Calculate Plant Factor
Calculate Thrust at Rated
Calculate Combined Bending Moment on Blades at Rated
Calculate Wind Wheel RPM at Rated
Calculate Number of Speed-up Stages Required
Calculate Overall Speed-up Ratio
Calculate Required Speed-up Ratio for Each Stage

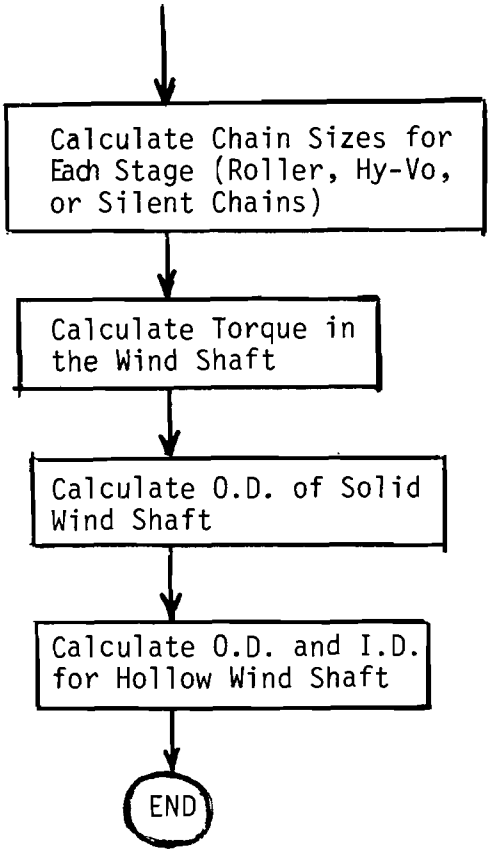
Calculate Chain Sizes for Each Stage (Roller, Hy-Vo, or Silent Chains)
Calculate Torque in the Wind Shaft
Calculate O.D. of Solid Wind Shaft
Calculate O.D. and I.D. for Hollow Wind Shaft
END

LIST OF VARIABLES
FOR PROGRAM WIND

NAME	DIMENSION	MEANING
C	Scalar	Wiebull C Value
K	Scalar	Wiebull K Value
WS	Vector 1 by 2	WS(1) = Mean Wind Speed
		WS(2) = Standard Deviation
HRS	Scalar	Time Period in Question
		i.e., Month (730 hrs)
		Season (2190 hrs)
		Year (8760 hrs)
D	Scalar	Rotor Diameter
R	Scalar	Rotor Radius
V	Vector 1 by 3	V(1) = Cut-in
		V(2) = Rated MPH
		V(3) = Furling
V_1	Scalar	Rated Wind Speed F.P.S.
VMS	Vector 1 by 3	VMS(1) = Cut-in
		VMS(2) = Rated MPS
		VMS(3) = Furling
NB	Scalar	Number ofBlades
TSR	Scalar	Tip Speed Ratio
SS	Scalar	Design Shear Stress for Wind Shaft
RATED	Scalar	Output RPM
A	Vector 1 by 3	A(1) = Power Coefficient

NAME	DIMENSION	MEANING
		A(2) = Thrust Coefficient
		A(3) = Bending Moment Coefficient
Ro	Scalar	Density of Air
CONST	Scalar	Constant for Converting Ft-Sec to Kw
T_1	Scalar	Number of Hours a Prescribed Wind Speed is Exceeded
T_2	Scalar	Number of Hours a Prescribed Wind Speed is Exceeded
KWHR1	Scalar	Energy Generated From Rated to Furling
VMS*	Vector 1 by n	Wind Speed Increments for Numerical Integration (MPS)
VFS**	Vector 1 by n	Wind Speed Increments for Numerical Integration (FPS)
SUM	Scalar	Energy Generated From Cut-in to Rated-n
O	Scalar	Rated Output
PF	Scalar	Plant Factor
T	Scalar	Thrust at Rated
B	Scalar	Bend Moment at Blade Roots (Combined)
WR	Scalar	Wind Wheel RPM at Rated
RATIO	Scalar	Number of Speed-Up Stages Required
ST	Scalar	Torque in the Wind Shaft at Rated
SD	Scalar	Wind Shaft Diameter (Solid)
SDO	Scalar	Wind Shaft Outside Diameter (Hollow)
SDI	Scalar	Wind Shaft Inside Diameter (Hollow)

NAME	DIMENSION	MEANING
WRT	Scalar	Overall Speed-Up Ratio

*Redefined on Line 50 of Program (WIND)

**Redefined on Line 49 of Program (WIND)

HARTFORD, CT.
WINTER

CUT-IN (MPH)	5.00
RATED (MPH)	20.00
FURLING (MPH)	50.00
NO. OF BLADES	3.00
TIP SPEED RATIO	7.50
POWER COEFFICIENT	0.45

WIND WHEEL DIA (FT.)	20.00
OUTPUT KW-HRS/SEASON	3143.23
WIND WHEEL DIA (FT.)	25.00
OUTPUT KW-HRS/SEASON	4911.29
WIND WHEEL DIA (FT.)	30.00
OUTPUT KW-HRS/SEASON	7072.26
WIND WHEEL DIA (FT.)	35.00
OUTPUT KW-HRS/SEASON	9626.13
WIND WHEEL DIA (FT.)	40.00
OUTPUT KW-HRS/SEASON	12572.90
WIND WHEEL DIA (FT.)	45.00
OUTPUT KW-HRS/SEASON	15912.58
WIND WHEEL DIA (FT.)	50.00
OUTPUT KW-HRS/SEASON	19645.16
WIND WHEEL DIA (FT.)	55.00
OUTPUT KW-HRS/SEASON	23770.64
WIND WHEEL DIA (FT.)	60.00
OUTPUT KW-HRS/SEASON	28289.03

SAMPLE OF TYPICAL

OUTPUT FROM PROGRAM WIND

SAMPLE OF TYPICAL

OUTPUT FROM PROGRAM WIND

WIND WHEEL DIA (FT).....	35.00	
NUMBER OF BLADES.....	3	
TIP SPEED RATIO.....	7.5	
RATED OUTPUT (KW).....	17.84	
COST OF ENERGY CONVERTER (DOLLARS).	987.14	
V CUTIN (MPH).....	5.00	Fall Output for
V RATED (MPH).....	20.00	Hartford, CT
V FURLING (MPH).....	50.00	
TOTAL OUTPUT KW-HRS/YR	8333	
PLANT FACTOR	0.21	
THRUST (LBS)	753	
BENDING MOMENT (FT-LBS)	2414	
WIND WHEEL RPM	120	
WIND SHAFT TORQUE (IN-LBS)	12524	
WIND SHAFT DIA (IN)	2.00	
HOLLOW WIND SHAFT OD (IN)	2.41	
HOLLOW WIND SHAFT ID (IN)	1.95	
OVERALL SPEED-UP RATIO	4.37	

ROLLER CHAIN DRIVE

CHAIN PITCH.....	1.25
NO. OF TEETH IN SM. SPROCKET	21
NO. OF TEETH IN LG. SPROCKET	44
SERVICE FACTOR	1.6
APPROX. CENTER DISTANCE	15.49
APPROX. LENGTH OVERALL	28.39
FEET PER MINUTE	550

ROLLER CHAIN DRIVE

CHAIN PITCH.....	1.00
NO. OF TEETH IN SM. SPROCKET	21
NO. OF TEETH IN LG. SPROCKET	44
SERVICE FACTOR	1.3
APPROX. CENTER DISTANCE	12.39
APPROX. LENGTH OVERALL	22.72
FEET PER MINUTE	919

```
      ∇WIND
[1]     'ENTER C AND K ?'
[2]     C←⎕
[3]     K←⎕
[4]     →(C≠0)/LC
[5]     'ENTER MEAN WIND SPEED AND STANDARD DEVIATION'
[6]     WS←⎕
[7]     WS←WS×0.446
[8]     WV←WS[2]÷WS[1]
[9]     K←K1+(K2×WV)+(K3×*WV)
[10]    C←C1+(C2×WV)+(C3×*WV)+(C4×*(2×WV))
[11]    C←WS[1]×C
[12]   LC:'ENTER TIME PERIOD'
[13]    HRS←⎕
[14]    'ENTER BLADE DIA. (FT.)'
[15]    D←⎕
[16]    R←D÷2
[17]    'ENTER CUT-IN, AND RATED, AND CUT-OUT WIND SPEED (MPH)'
[18]    V←⎕
[19]    V1←V[2]×1.47
[20]    VMS←V×0.446
[21]    'ENTER NO. OF BLADE AND TIP SPEED RATIO'
[22]    NB←⎕
[23]    TSR←⎕
[24]    'ENTER DESIGN STRESS IN SHEARFOR WIND SHAFT (PSI)'
[25]    SS←⎕
[26]    'ENTER 0 FOR WATER TWISTER OR REQUIRE OUTPUT FOR GENERATOR'
[27]    RATED←⎕
[28]    →(D≠0)/LBO
[29]    ZZ←0
[30]    DIA←20,25,30,35,40,45,50
[31]   LOZ:ZZ←ZZ+1
[32]    D←DIA[ZZ]
[33]    R←D÷2
[34]   LBO:→(NB=3)/LA
[35]    A←3⍴0.435,0.7539999999999,0.2
[36]    →LB
[37]   LA:A←3⍴0.454,0.764,0.14
[38]   LB:RO←0.00237
[39]    CONST←0.001356
[40]    T1←HRS×*(-(VMS[3]÷C)*K)
[41]    T2←HRS×*(-(VMS[2]÷C)*K)
[42]    KWHR1←((A[1]×0.5×RO×○1×(R*2)×V1*3)×(T2-T1))×CONST
[43]    F←V[2]-V[1]
[44]    F←2×(F+1)
[45]    F2←2×(V[1]-1)
[46]    SUM←0
[47]    Z←1
[48]    VI←0.5×(F2+\F)
[49]    VFS←VI×1.47
[50]    VMS←VI×0.446
[51]   LS:T1←HRS×*(-(VMS[Z]÷C)*K)
[52]    KW1←A[1]×0.5×RO×○1×(R*2)×(VFS[Z]*3)×CONST
[53]    Z←Z+1
[54]    T2←HRS×*(-(VMS[Z]÷C)*K)
[55]    KW2←A[1]×0.5×RO×○1×(R*2)×(VFS[Z]*3)×CONST
[56]    KW←((KW2+KW1)÷2)×(T1-T2)
[57]    SUM←SUM+KW
[58]    →(Z<⍴VI)/LS
[59]    O←A[1]×0.5×RO×○1×(R*2)×(V1*3)×CONST
[60]    ''
[61]    ''
```

```
[62]    ''
[63]    ''
[64]    ''
[65]    ''
[66]    PRICE
[67]    COST←COSTxO
[68]    →(RATED≠0)/LZ
[69]    RATED←264.7652349x((O÷0.746)*(1÷3))
[70]    COST←800
[71]   LZ:HP←O÷0.746
[72]    PF←(KWHR1+SUM)÷(HRSxA[1]x0.5xROx⍟1x(R*2)x(V1*3)xCONST)
[73]    T←A[2]x0.5xROx⍟1x(R*2)xV1*2
[74]    B←A[3]x0.5xROx⍟1x(R*3)xV1*2
[75]    WR←(V1xTSRx60)÷(Rx2x⍟1)
[76]    WRT←RATED÷WR
[77]    →(WRT>8 3.5 0)/LI,LQ,LW
[78]   LW:RATIO←WRT
[79]    →LM
[80]   LQ:RATIO←WRT*0.5
[81]    →LM
[82]   LI:RATIO←WRT*(1÷3)
[83]   LM:ST←((O÷0.746)x63025)÷WR
[84]    SD←((16xST)÷(⍟1xSS))*(1÷3)
[85]    SDO←(SD÷2)+((SDx1.414)÷2)
[86]    SD1←SDO*2
[87]    SD2←(SD*2)÷2
[88]    SDI←(SD1-SD2)*0.5
[89]    '                WIND WHEEL DIA (FT)................ ',8 2⍕D
[90]    '                NUMBER OF BLADES.................... ',8 0⍕NB
[91]    '                TIP SPEED RATIO..................... ',8 1⍕TSR
[92]    '                RATED OUTPUT (KW)................... ',8 2⍕O
[93]    '                COST OF ENERGY CONVERTER (DOLLARS). ';8 2⍕COST
[94]    '                V CUTIN (MPH)....................... ',8 2⍕V[1]
[95]    '                V RATED (MPH)....................... ',8 2⍕V[2]
[96]    '                V FURLING (MPH)..................... ',8 2⍕V[3]
[97]    '                TOTAL OUTPUT KW-HRS/YR ............ ',8 0⍕KWHR1+SUM
[98]    '                PLANT FACTOR ....................... ',8 2⍕PF
[99]    '                THRUST (LBS) ....................... ',8 0⍕T
[100]   '                BENDING MOMENT (FT-LBS) ........... ',8 0⍕B
[101]   '                WIND WHEEL RPM ..................... ',8 0⍕WR
[102]   '                WIND SHAFT TORQUE (IN-LBS) ........ ',8 0⍕ST
[103]   '                WIND SHAFT DIA (IN) ............... ',8 2⍕SD
[104]   '                HOLLOW WIND SHAFT OD (IN) ......... ',8 2⍕SDO
[105]   '                HOLLOW WIND SHAFT ID (IN) ......... ',8 2⍕SDI
[106]   '                OVERALL SPEED-UP RATIO ............ ',8 2⍕WRT
[107]   ''
[108]   ''
[109]   ''
[110]   ''
[111]   CHAIN
[112]   ''
[113]   ''
[114]   ''
[115]   ''
[116]   ''
[117]   ''
[118]   ''
[119]   ''
[120]   →(ZZ<⍴DIA)/LOZ
      ∇
```

APPENDIX III

SOME CONVERSION FACTORS

Length

1 foot x .3048 = 1 meter

Mass

slug/ft^3 x 515.4 = Kg/M^3

Velocity

Ft/Sec x .3048 = M/Sec

Mph x .447 = M/Sec

Mph x 1.47 = Ft/Sec

Energy

Kw-hr x 3413 = BTU

Power

Hp x746 = Watts

FOOTNOTES

[1] Research News, William D. Metz, September 2, 1977, page 971.

[2] Aerodynamic Performance of Wind Turbines, Wilson, Lissaman, and Walker, ERDA/NSF/04014-76/1, page 11.

[3] A Comparative Study of Optimized Blade Configurations for High Speed Wind Turbines, Technical Report, UM-WF-TR-77-9, ERDA E(49-18) 2365, pages 77-78.

[4] Reference Wind Speed Distribution and Height Profiles for Wind Turbines Design and Performance Evaluations Application, Justus, Hargraves, and Mikhail, work performed under contract No. E(40-1)5108, 1976.

[5] The Wind Turbine/Water Twister Combination, W. Nissley, M-1394.

[6] OPEC Crude Oil Prices Could Double by 1985, Analyst Says, as Worldwide As Worldwide Demand Grows, Wall Street Journal, June 9, 1977.

BIBLIOGRAPHY

1. American Plywood Association, Plywood Design Specification, 1966.

2. Baumeister, Theodore, Marks' Standard Handbook for Mechanical Engineers, McGraw-Hill, New York, NY, 1971.

3. Cromack, D., Professor, personal communication, Department of Mechanical Engineering, University of Massachusetts, 1976-1978.

4. Cromack, Lefebvre, A Comparative Study of Optimized Blade Configurations for High Speed Wind Turbines, Technical Report, UM-WF-TR-77-9, ERDA E(49-18) 2365.

5. Gilman and Rose, APL An Interactive Approach, John Wiley & Sons, Inc., New York, NY, 1970.

6. Golding, E. W., "The Generation of Electricity by the Wind", Halstad Press, John Wiley & Sons, Inc., New York, NY, 1956.

7. Heronemus, W. E., Professor, personal communication, Department of Civil Engineering, University of Massachusetts, 1975-1978.

8. Hooker, Richard, personal communication, President of Hooker Transmission, Chicopee, MA, 1977-1978.

9. James, Smith, and Wolford, Applied Numerical Methods for Digital Computation, A Dun-Donnelley Publisher, New York, NY, 1977.

10. Justus, Hargraves, and Mikhail, Reference Wind Speed Distribution and Height Profiles for Wind Turbines Design and Performance Evaluations Application, work performed under contract No. E(40-1) 5108, 1976.

11. Lipson, Charles, and Sheth, Narendra J., Statistical Design and Analysis of Engineering Experiments, McGraw-Hill, New York, NY, 1973.

12. Lockheed-California Company, Wind Energy Mission Analysis, prepared under contract AT(04-3) 1075, 1976.

13. Putnam, Palmer C., "Power From the Wind", Van Nostrant Reinhold Company, London, England, 1948.

14. Spotts, Design of Machine Elements, Prentice-Hall, Inc., Englewood Cliffs, NJ, 1971.

15. Stoddard, F. S., Discussion of Momentum Theory for Windmills, University of Massachusetts Energy Alternatives Program, TR/76/2.

16. Wilson, Lissaman, Walker, Aerodynamic Performance of Wind Turbines, work performed under grant AER74-04014A03 for NSF, 1976.