University of Massachusetts - Amherst
ScholarWorks@UMass Amherst

Physics Department Faculty Publication Series | Physics Department

2010

Beyond Spontaneously Broken Symmetry in Bose-Einstein Condensates

WJ Mullin
mullin@physics.umass.edu

F Laloe

Follow this and additional works at: http://scholarworks.umass.edu/physics_faculty_pubs

Part of the Physics Commons

Mullin, WJ and Laloe, F, "Beyond Spontaneously Broken Symmetry in Bose-Einstein Condensates" (2010). *Physics Department Faculty Publication Series.* Paper 22.
http://scholarworks.umass.edu/physics_faculty_pubs/22

This Article is brought to you for free and open access by the Physics Department at ScholarWorks@UMass Amherst. It has been accepted for inclusion in Physics Department Faculty Publication Series by an authorized administrator of ScholarWorks@UMass Amherst. For more information, please contact scholarworks@library.umass.edu.

arXiv:0912.5360v2 [quant-ph] 31 Dec 2009

Beyond spontaneously broken symmetry in Bose-Einstein condensates

W. J. Mullin[a] and F. Laloë[b]

[a] *Department of Physics, University of Massachusetts, Amherst, Massachusetts 01003 USA*

[b] *Laboratoire Kastler Brossel, ENS, UPMC, CNRS; 24 rue Lhomond, 75005 Paris, France*[*]

Abstract

Spontaneous symmetry breaking (SSB) for Bose-Einstein condensates cannot treat phase off-diagonal effects, and thus not explain Bell inequality violations. We describe another situation that is beyond a SSB treatment: an experiment where particles from two (possibly macroscopic) condensate sources are used for conjugate measurements of the relative phase and populations. Off-diagonal phase effects are characterized by a "quantum angle" and observed via "population oscillations", signaling quantum interference of macroscopically distinct states (QIMDS).

If two or more Bose-Einstein condensates (BEC) merge, they produce an interference pattern in their densities, as shown by spectacular experiments with alkali atoms [1]. The usual explanation assumes spontaneous symmetry breaking (SSB) of particle number conservation, where each condensate gets a (random) classical phase and a macroscopic wave function:

$$\langle \psi_{\alpha,\beta}(\mathbf{r}) \rangle = \sqrt{n_{\alpha,\beta}(\mathbf{r})}\; e^{i\phi_{\alpha,\beta}(\mathbf{r})} \tag{1}$$

where $n_{\alpha,\beta}(\mathbf{r})$ and $\phi_{\alpha,\beta}$ are density and phases of condensates α, β. Alternatively, one can use a "phase state" describing two condensates with a relative phase ϕ and a fixed total number of particles:

$$|\phi, N\rangle = \frac{1}{\sqrt{2^N N!}}\; (a_\alpha^\dagger + e^{i\phi} a_\beta^\dagger)^N\, |0\rangle \tag{2}$$

where $a_\alpha^\dagger$ and $a_\beta^\dagger$ create particles in condensates α and β, respectively. However, one can also consider that two condensates are more naturally described by a double Fock state (DFS), a state of definite particle numbers, for which the phase is completely undetermined:

$$|N_\alpha N_\beta\rangle = \frac{1}{\sqrt{N_\alpha! N_\beta!}}\; a_\alpha^{\dagger N_\alpha} a_\beta^{\dagger N_\beta}\, |0\rangle \tag{3}$$

It is found [2]-[4] that repeated quantum measurements of the relative phase of two Fock states can make a well-defined value emerge spontaneously, but with a random value. For example, the probability of finding M particles, out of a total of N, at positions $\mathbf{r}_1 \ldots \mathbf{r}_M$ where $M \ll N$ is shown to be given by [3, 4]:

$$P(\mathbf{r}_1, \cdots \mathbf{r}_M) \sim \int_{-\pi}^{\pi} \frac{d\lambda}{2\pi} \prod_{i=1}^{M} [1 + \cos(\mathbf{k}\cdot\mathbf{r}_i + \lambda)] \tag{4}$$

Positions can be obtained one by one from this distribution; for large enough M the integrand peaks sharply [5] at a single value, just as a particular phase is found in the interference measurement of Ref. [1].

One can ask whether the SSB approach is appropriate [6] and whether it gives complete information [4]. Indeed we will show that the assumption that the condensates are described by Eq. (3) gives a broader range of physical possibilities, which are unavailable when using Eq. (2). The additional effects involve phase *off*-diagonal terms, which can result in (I) violations of local realism, i.e. violations of Bell inequalities, and (II) the occurrence of quantum interference between macroscopically distinct states (QIMDS), as discussed by Leggett [7]. Neither of these effects is available in the SSB treatment. We have previously

discussed [4] violations of Bell inequalities with double Fock states. Here we will show that the effect II can be detected in interferometer experiments by the observation of "population oscillations", first introduced by Dunningham et al [8] within a three-condensate position interference analysis. Theses oscillations are more robust than Bell inequality measurements, since a few missed particles can be tolerated.

Leggett [7] considers how one might test for QIMDS by finding coherent superpositions involving large numbers of particles ("Schrödinger cats"). One can tell the difference between such a pure state and a statistical mixture of the elements of the state only by observing the off-diagonal matrix elements between the different wave-function elements. For example, in a state of the form $\Psi = c_a\psi_a(1,2,3,\cdots,N) + c_b\psi_b(1,2,3,\cdots,N)$ one hopes to see terms like $\langle\psi_a|G|\psi_b\rangle$ and its complex conjugate, where G is an appropriate N-body operator connecting the two states. As Leggett [7] says, "$\cdots$ what matters is that not one but a large number of elementary constituents are behaving quite differently in the two branches." Here we discuss an experiment where particles from each of two Bose condensate sources are either deviated via a beam splitter to a side collector or proceed to an interferometer. The measurements in the interferometer create the two branches, and the detection in the side detectors (involving the connecting G operator) allows the observation of the off-diagonal matrix elements of the two components. In recent years several experiments have begun to make progress toward the goal set by Leggett, by use of large atoms [9], superconductors [10], magnetic molecules [11], a quantum dot "molecule" [12], and photons [13], and including a Bell inequality violation in a Josephson phase qubit [14].

Fig. 1 shows the interferometer. The QIMDS state is created from the double Fock state by an interference measurement at beam splitter BS, with detectors 1 and 2 giving results m_1, m_2. The path difference between the two sources to BS is represented by angle θ. Detectors 3 and 4 record m_α and m_β particles respectively; although they seem to measure only the source populations, they are actually sensitive to QIMDS, as we will see.

With a single quantum particle crossing two slits, which act as sources giving rise to interference, one can measure either the interference pattern and have access to the relative phase of the sources, or from which source the particle comes; they are exclusive measurements. Here, because condensates provide many particles in the same quantum state, some of them can be used for a phase measurement, others for a source measurement.

The destruction operators a_1, a_2, a_3 and a_4 associated with the output modes of the

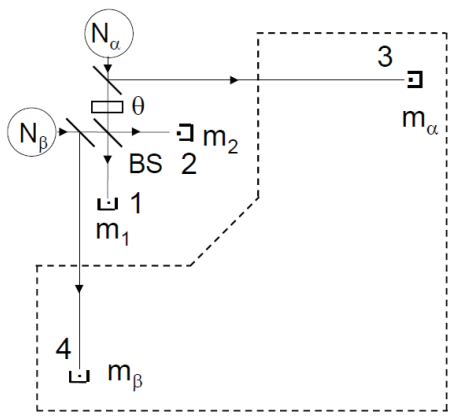

FIG. 1: Two source condensates, with populations N_α and N_β, emit particles. Some of them reach the central beam splitter BS, followed by detectors 1 and 2 registering m_1 and m_2 counts. The other particles are then described by a quantum superposition of macroscopically distinct states propagating inside the region shown with a dotted line; they eventually reach counters 3 and 4, which register m_α and m_β counts respectively. A phase shift $\theta = \pi/2$ occurs in one path.

interferometer can be written in terms of the source mode operators, a_α and a_β, by tracing back from the detectors to the sources, with a factor $1/\sqrt{2}$ at each beam splitter and a phase shift of $\pi/2$ at each reflection:

$$\begin{aligned} a_1 &= \frac{1}{2}\left(e^{i\theta}a_\alpha + ia_\beta\right); \qquad a_2 = \frac{1}{2}\left(ie^{i\theta}a_\alpha + a_\beta\right) \\ a_3 &= \frac{i}{\sqrt{2}}a_\alpha; \qquad a_4 = \frac{i}{\sqrt{2}}a_\beta \end{aligned} \tag{5}$$

The probability amplitude for finding particle numbers $\{m_1, m_2, m_\alpha, m_\beta\}$ is:

$$C_{m_1,m_2,m_\alpha,m_\beta} = \left\langle 0 \left| \frac{a_3^{m_\alpha} a_4^{m_\beta} a_1^{m_1} a_2^{m_2}}{\sqrt{m_1! m_2! m_\alpha! m_\beta!}} \right| N_\alpha N_\beta \right\rangle \tag{6}$$

The double Fock state (DFS) $|N_\alpha N_\beta\rangle$ can be expanded in phase states as:

$$|N_\alpha N_\beta\rangle = \sqrt{\frac{2^N N_\alpha! N_\beta!}{N!}} \int_{-\pi}^{\pi} \frac{d\phi}{2\pi} e^{-iN_\beta\phi} |\phi, N\rangle \tag{7}$$

where the phase state having constant total numbers of particles is given by Eq. (2). These states have the property that, for $a_i = v_{i\alpha}a_\alpha + v_{i\beta}a_\beta$ $(i = 1, 2)$:

$$a_i |\phi, N\rangle = \sqrt{\frac{N}{2}}(v_{i\alpha} + v_{i\beta}e^{i\phi}) |\phi, N-1\rangle \tag{8}$$

so that the state created by the interferometer is:

$$|\Gamma\rangle \equiv a_1^{m_1} a_2^{m_2} |N_\alpha N_\beta\rangle \sim \int_{-\pi}^{\pi} \frac{d\phi}{2\pi} e^{-iN_\beta \phi} R(\phi) |\phi, N-M\rangle \tag{9}$$

where $M = m_1 + m_2$ and:

$$R(\phi) \;=\; (e^{i\theta} + ie^{i\phi})^{m_1} (ie^{i\theta} + e^{i\phi})^{m_2} \tag{10}$$

If we take $\theta = \pi/2$ (as we do henceforth) this takes the simple form:

$$R(\phi) = (2ie^{i\phi/2})^M \left(\cos\frac{\phi}{2}\right)^{m_1} \left(\sin\frac{\phi}{2}\right)^{m_2} \tag{11}$$

Fig. 2 shows $\hat{R}(\phi) = R(\phi) \times (2ie^{i\phi/2})^{-M}$, which has two peaks at $\pm\phi_0 = \pm 2 \arctan\sqrt{m_2/m_1}$.

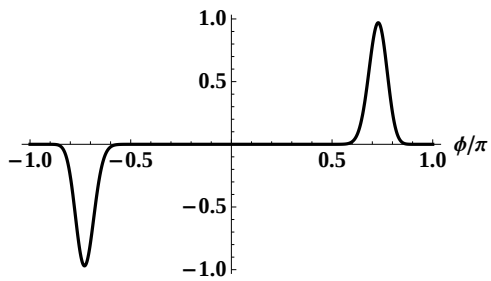

FIG. 2: Variations of $\hat{R}(\phi)$ if results $m_1 = 17$ and $m_2 = 83$ are obtained. The peaks are at $\phi_0 = \pm 0.73\pi$ (the phase choice $\theta = \pi/2$ gives symmetrical peaks about zero). The relative sign of the two peaks is $(-1)^{m_2}$. For large numbers of particles, the measurement produces a coherent superposition of macroscopically distinct states ("Schrödinger cat").

This is not surprising: classically, the ratio of the intensities in the output arms of the interferometer determines the absolute value or the phase difference between the two input beams, but not its sign. Separating the negative and positive contribution of ϕ provides:

$$|\Gamma\rangle = |\psi_+\rangle + (-1)^{m_2} |\psi_-\rangle \tag{12}$$

Let us begin with a qualitative calculation. We assume that M is large, so that the peaks are sharp and:

$$|\psi_\pm\rangle \sim e^{\mp i(N_\beta - M/2)\phi_0} |\pm\phi_0, N-M\rangle \tag{13}$$

These two wave-function branches are orthogonal for large M for any ϕ_0 not too near zero; and they are macroscopic as long as $N - M$ is large.

Showing QIMDS requires making a measurement that is sensitive to the interference between the two components; this is the role of the side-detectors shown in Fig. 1. Because $a_3^{m_\alpha} a_4^{m_\beta} \left|\pm\phi_0, N-M\right\rangle \sim e^{\pm i m_\beta \phi_0} \left|0\right\rangle$, the probability of getting the set $\{m_1, m_2, m_\alpha, m_\beta\}$ becomes:

$$P(m_1, m_2, m_\alpha, m_\beta) \sim 1 + (-1)^{m_2} \cos\left[(m_\alpha - m_\beta)\,\phi_0\right] \tag{14}$$

(if $N_\alpha = N_\beta$), where the cosine terms arises from the sum of the two cross terms $\left\langle \psi_\pm \left| a_3^{\dagger m_\alpha} a_4^{\dagger m_\beta} a_3^{m_\alpha} a_4^{m_\beta} \right| \psi_\mp \right\rangle$. Now, if one does the interferometer experiment for fixed source numbers, say, $N_\alpha = N_\beta$, and considers only those experiments having the same m_1, m_2, then the interference between the two elements will show up in a cosine variation of probability with m_α. We call this effect "population oscillations"; it was already discussed in Ref. [8] for three-condensate experiments.

These oscillations are beyond SSB since they disappear if one starts from either (1) or (2). With a phase state of phase χ for instance, the action of the destruction operators $a_{1,2}$ on this state introduces χ instead of an integration variable ϕ into (8); this leads essentially to (9) without the ϕ integral. No interference effect between two phase peaks occurs and the probability is proportional to $|R(\chi)|^2$. One gets a m_α, m_β dependence of the probability that is proportional to a simple binomial distribution $(N-M)!/m_\alpha! m_\beta!$, without any oscillation. Actually the angle χ plays no role at all in this dependence, which is natural since detectors 3 and 4 do not see an interference effect between two beams; they just measure the intensities of two independent sources after a beam splitter at their output.

A more accurate calculation is now presented. Operating on Eq. (9) with $a_3^{m_\alpha} a_4^{m_\beta}$, and forming the probability introduces another angle ϕ', so that the probability for finding the set $\{m_1, m_2, m_\alpha, m_\beta\}$ takes the form:

$$P(m_1, m_2, m_\alpha, m_\beta) = \frac{N_\alpha! N_\beta!}{m_1! m_2! m_\alpha! m_\beta!} \frac{1}{2^{N+M}} \int_{-\pi}^{\pi} \frac{d\phi'}{2\pi} \int_{-\pi}^{\pi} \frac{d\phi}{2\pi} e^{-i(N_\alpha - m_\alpha)(\phi - \phi')} R^*(\phi') R(\phi) \tag{15}$$

We note that one phase branch peak occurs for $-\pi \le \phi \le 0$ and the other for $0 \le \phi \le \pi$, so that the overlap between different branches occurs for $\phi' \neq \phi$. A change of variables to $\Lambda = (\phi - \phi')/2$ and $\lambda = \pi/2 - \theta + (\phi + \phi')/2$ leads to:

$$\begin{aligned} P(m_1, m_2, m_\alpha, m_\beta) \;=\; & \frac{N_\alpha! N_\beta!}{m_1! m_2! m_\alpha! m_\beta! 2^N} \int_{-\pi}^{\pi} \frac{d\Lambda}{2\pi} \cos\left[(N_\alpha - m_\alpha - N_\beta + m_\beta)\,\Lambda\right] \int_{-\pi}^{\pi} \frac{d\lambda}{2\pi} \\ & \times \left[\cos\Lambda + \cos\lambda\right]^{m_1} \left[\cos\Lambda - \cos\lambda\right]^{m_2} \end{aligned} \tag{16}$$

When $\theta = \pi/2$ the "classical phase angle" λ is half the sum of ϕ and ϕ'. The expresssion also contains another angle, Λ, which we call the "quantum angle" - in Ref. [4] it appeared as a consequence of a conservation rule, but here we introduce it to characterize quantum interference effects between different values of the phase.

To examine the behavior of the probability, we plot the quantity:

$$F(\Lambda, \lambda) = [\cos\Lambda + \cos\lambda]^{m_1} [\cos\Lambda - \cos\lambda]^{M-m_1} \tag{17}$$

We take $N_\alpha = N_\beta = M = 100$ in our examples here. $F(\Lambda, \lambda)$ has multiple peaks as shown in Fig. 3 for $m_1 = 17$. The extrema are easily shown to occur at:

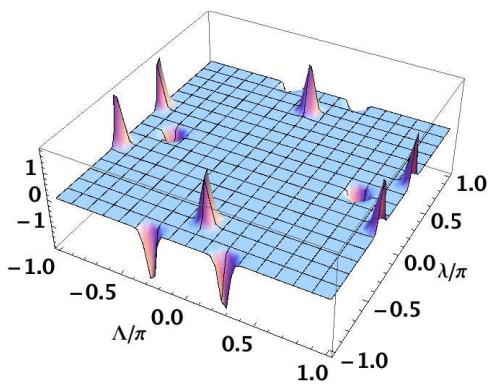

FIG. 3: Plot of $F(\Lambda, \lambda)$ as a function of Λ and λ for $m_1 = 17$ and $m_2 = 83$. The peaks along $\Lambda = 0$ and $\pm\pi$ correspond to phase diagonal matrix elements, while the negative depressions, having $\Lambda \neq 0$, correspond to off-diagonal matrix elements between two macroscopic phases (QIMDS). If m_1 and m_2 are even, the negative depressions become positive peaks.

$$\begin{aligned}
\Lambda &= 0 \quad \text{and} \quad \lambda = \pm 2\arctan\left(\sqrt{m_2/m_1}\right); \\
\Lambda &= \pm\pi \quad \text{and} \quad \lambda = \pm 2\arctan\left(\sqrt{m_1/m_2}\right); \\
\Lambda &= \pm 2\arctan\left(\sqrt{m_2/m_1}\right) \quad \text{and} \quad \lambda = 0\,; \\
\Lambda &= \pm 2\arctan\left(\sqrt{m_1/m_2}\right) \quad \text{and} \quad \lambda = \pm\pi
\end{aligned} \tag{18}$$

For $m_1 = 17$, $m_2 = 83$ we have peaks $(\Lambda, \lambda) = (0, \pm 2.29)$, $(\pi, \pm 0.85)$ and depressions at $(\Lambda, \lambda) = (\pm 2.29, 0), (\pm 0.85, \pm\pi)$, where $\pi - 2.29 = 0.85$. These extrema are precisely at the positions given by the elements of the density matrix associated with state (13).

The peaks along $\Lambda = 0$ (and $\pm\pi$) correspond to phase-diagonal matrix elements which, in (16), introduce the usual probabilities $[1 \pm \cos\lambda]$ associated with an interferometer, av-

eraged oven a random phase λ. The extrema centered at $\Lambda \neq 0$ are phase off-diagonal, and directly indicate QIMDS since here the phase state is macroscopic. When Λ does not vanish, probabilities become quasi-probabilities $[\cos\Lambda \pm \cos\lambda]$, which may be negative.

Now, in (16), the m_α and m_β dependence is given by the cosine Fourier transform of a function obtained by integrating $F(\Lambda, \lambda)$ in Eq.(17) over λ. Because $F(\Lambda, \lambda)$ has multiple peaks, the final probability contains oscillations as a function of m_α as shown in Fig. 4 - if we replace the peaks in $F(\Lambda, \lambda)$ with δ-functions we recover exactly Eq. (14). By contrast, within SSB the result is equivalent to Eq. (16), but with Λ set to zero, which cancels the contribution of the off-diagonal peaks. The probabilities then become smooth functions of m_α, with no dips or peaks; population oscillations disappear.

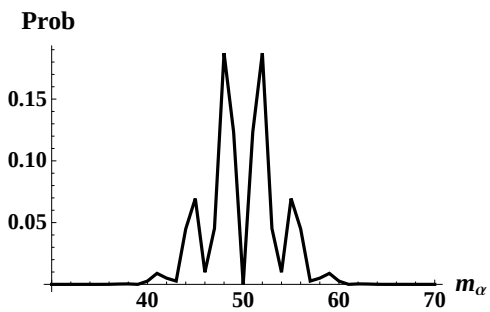

FIG. 4: Plot of $P(m_1, m_\alpha)$ given by Eq. (16) versus m_α for $N_\alpha = N_\beta = M = 100$, $m_1 = 17$ and $m_2 = 83$. If m_2 is even, the central dip is replaced by a peak.

If we did not count m_α and m_β but summed over these variables with a given sum $m_\alpha + m_\beta = N - M$, we would get a factor $(\cos\Lambda)^{N-M}$, strongly peaked at $\Lambda = 0$ if $N - M$ is large. The probability of finding the result set $\{m_1, m_2\}$ would then be $P(m_1, m_2) \sim \int_{-\pi}^{\pi} \frac{d\lambda}{2\pi} [1 + \cos\lambda]^{m_1} [1 - \cos\lambda]^{m_2}$. This still has two peaks in the integrand, which arise since the interferometer cannot discriminate between opposite relative phases. But what is now obtained is a statistical mixture of these two phases, without any population oscillation; the situation is analogous to that described by Eq. (4).

The analysis of Bell violations in Ref. [4] shows that one single missed particle cancels the violation. The population oscillations have no special relation to locality, and they are more robust. We have shown that, by proper selection of m_1 and m_2, one can preserve a small central with as many as 5 particles lost.

In conclusion, two kinds of interference effects occur. One produces the fringes seen in the MIT experiments in the merging of two Bose condensates. This effect can be explained

by using SSB and either Eq. (1) or Eq. (2). But the approach using a double Fock state preserves a second interference effect: the macroscopic quantum interference that involves the off-diagonal elements corresponding to $\Lambda \neq 0$, and leads to QIMDS that are observable via "population oscillations".

Laboratoire Kastler Brossel is "UMR 8552 du CNRS, de l'ENS, et de l'Université Pierre et Marie Curie".

---

* Electronic address: mullin@physics.umass.edu;laloe@lkb.ens.fr

[1] M.R.Andrews, C.G.Townsend, H.-J. Miesner, D.S. Durfee, D.M.Kurn, W.Ketterle, Science, 275, 637 (1997).

[2] J. Javanainen and Sun Mi Yoo, Phys. Rev. Lett. **76**, 161-164 (1996);T. Wong, S. M. Tan, M. J. Collett and D. F. Walls, Phys. Rev. A **55**, 1288 (1997). J. I. Cirac, C. W. Gardiner, M. Naraschewski and P. Zoller, Phys. Rev. A **54**, R3714 (1996). Y. Castin and J. Dalibard, Phys. Rev. A **55**, 4330 (1997). K. Molmer, Phys. Rev. A **55**, 3195 (1997); J. Mod. Opt. **44**, 1937 (1997). M. Naraschewski, A. Röhrl, H. Wallis and A. Schenzle, Mat. Sci. and Engineer. **B48**, 1-6 (1997).

[3] F. Laloë, Europ. Phys. J. D, **33**, 87 (2005); see also cond-mat/0611043.

[4] F. Laloë and W.J. Mullin, Phys. Rev. Lett. **99**, 150401 (2007); Phys. Rev. A, **77** 022108 (2008).

[5] W. J. Mullin, R. Krotkov, and F. Laloë, Amer. J. Phys. **74,** 880 (2006).

[6] A. J. Leggett and F. Sols, Found. Phys. **21**, 353 (1991); A. J. Leggett, In A. Griffin, D. W. Snoke, and S. Stringari, "Bose-Einstein Condensation", p. 452, Cambridge University Press, (1995)

[7] A. J. Leggett, , Supple. Prog. Theor. Phys. **69**, 80-100 (1980); J. Phys: Condens. Matter 14, R415-R451 (2002); Physica Scripta, T102, 69 (2002).

[8] J. A. Dunningham, K. Burnett, R. Roth, and W. D. Phillips, New J. of Phys. **8,** 182 (2006).

[9] C. Monroe et al, Science **277**, 1131 (1996). M. Arndt, Nature 401, 680 (1999).

[10] J. Clarke et al, Science **239**, 992 (1988). R. Rouse, S. Han, J. E. Lukens, Phys. Rev. Lett. **75**, 1614 (1995). Y. Nakamura, C. D. Chen, and J. S. Tsai Phys. Rev. Lett. **79**, 2328 (1997). V. Bouchiat et al, Phys. Scrip. **T76**, 165 (1998). D. Flees et al, J. Supercon. **12**, 813 (1999).

Y. Nakamura et al, Nature **298**, 786 (1999). J. Friedman et al, Nature **406**, 43 (2000). C. H. van der Wal et al, Science **290**, 773 (2000). B. Julsgaard, Nature **41**, 400 (2001). D. Vion, Science **296**, 886 (2002). Yu. Paskin, Nature **421**, 823 (2003). A. Berkley et al, Science **300**, 1548 (2003). I. Chiorescu et al, Science **299**, 1869 (2003).

[11] D. Awschalom et al, Phys. Rev. Lett. **68**, 3092 (1992). W. Wernsdorfer et al, Science **284**, 133 (1999). E. del Barco et al, Euro. Phys. Lett. **47**, 722 (1999).

[12] T. H. Oosterkamp et al, Nature **395**,873 (1998).

[13] M. Brune et al, Phys. Rev. Lett. **77**, 4887 (1996).

[14] M. Ansmann, H. Wang, R. Bialczak, M. Hofheinz, E. Lucero, M. Neeley, A. D. O'Connell, D. Sank, M. Weides, J. Wenner, A. N. Cleland, and J. M. Martinis, Nature, **461**, 504 (2009).