University of Massachusetts Amherst

Design And Installation Of Heating System For Umass Solar Habitat I

Item Type	article;article
Authors	Wells, Ward Dyer;McGowan, John G.
Download date	2024-07-17 18:36:24
Link to Item	https://hdl.handle.net/20.500.14394/50489

UM-WF-TR-76-10

DESIGN AND INSTALLATION OF HEATING SYSTEM FOR UMASS SOLAR HABITAT I

Technical Report

W.D. Wells and J.G. McGowan

Mechanical Engineering Department

University of Massachusetts

Amherst, Massachusetts 01003

December 1976

Prepared for

THE U.S. ENERGY RESEARCH AND DEVELOPMENT

ADMINISTRATION UNDER CONTRACT NO. E(49-18)2365

NOTICE

This report was prepared as an account of work sponsored by the United States Government. Neither the United States nor the United States Energy Research and Development Administration, nor any of their employees, nor any of their contractors, subcontractors, or their employees, makes any warranty, express or implied, or assumes any legal liability or responsibility for the accuracy, completeness, or usefulness of any information, apparatus, product or process disclosed or represents that its use would not infringe privately owned rights.

ABSTRACT

This report contains details of design principles and installation of the solar and windpowered heating systems installed in UMass Solar Habitat I. Included are a complete specification of materials and operating instructions. A summary of potential modifications and improvements to the system is also included.

TABLE OF CONTENTS

Abstract		i
Table of Contents		ii
List of Figures and Tables		iii
CHAPTER I	Background	1
CHAPTER II	Objectives	14
CHAPTER III	Heating System Design	21
CHAPTER IV	Heating System Installation	42
CHAPTER V	Operation Instructions	57
CHAPTER VI	Future Modifications and Recommendations	62
Bibliography		69
APPENDIX A	Switching Logic	71
APPENDIX B	Summary of the Bill of Materials	92

LIST OF FIGURES AND TABLES

Figure		Page
1	Main Floor Plan of Solar Habitat One	3
2	Original NEWF Management Chart	6
3	Wind Furnace Project (First Year)	8
4	UMass Solar Habitat One - Foundation and Basement Laboratory	9
5	UMass Solar Habitat Site Plan	10
6	Artist's Conception of Solar Habitat One and NEWF	12
7	Solar Habitat One - South Wall	13
8	Effect of Storage Size on Auxiliary Energy Requirements of Wind Heating System with Thermal Storage	17
9	Energy Inputs and Monthly System Heating Load	18
10	MODEL 1A WIND TURBINE GENERATOR and Electric Baseboards (No Storage)	22
11	MODEL 2 WTG, Water Storage, Water Baseboards	24
12	MODEL 3A WTG and Collectors with Combined Storage, Water Baseboard Convectors	25
13	MODEL 3B WTG and Collector with Separate Storage, Water Baseboard Convectors	27
14	Electric Immersion Heater	31
15	Electric Immersion Heater Group	32
16	Tank Cover	33
17	Baseboard Convector	35
18	Collector Performance vs. Fluid Inlet Temperature	38
19	Heat Exchanger	40

Figure		Page
20	Solar Collector Loop	44
21	Tank Heater Loop	45
22	Piping Diagram Solar Collector Loop	46
23	Piping Diagram Tank Heater Loop	47
24	Manifold Arrangement	48
25	Solar Collector Loop Platform	49
26	Instrument Risers	51
27	Float Valve Circuit	53
28	Water Baseboard Convector Loops	54
29	Baseboard Loop Piping Diagram	55
30	Hot Water Preheat Loop	63
31	Manifold Suspension System	67
32	Switching Logic, Model 1-A	73
33	Switching Logic, Model 1 with Dump Tank	76
34	Switching Logic, Model 2	78
35	Switching Logic, Model 3-A	80
36	Switching Logic, Model 3-B	84
37	Switching Logic, Model 4-A	86
38	Switching Logic, Model 4-B	89
39	Switching Logic, Model 4-C	91
Table		
1	Estimated Baseboard Convector Performance	36

CHAPTER I

BACKGROUND

Introduction

The New England Wind Furnace (NEWF) Project was begun at the University of Massachusetts at Amherst in January 1972. The project's goal was to heat a home using electricity generated by a nearby windmill. In 1975 Federal funding was received which permitted expansion of the research staff and scope of the project.

Prior to this work, Professor Curtis Johnson of the UMass Agricultural Engineering Department began the design and construction of a single story, six room house under a Hatch Act grant from the U.S. Department of Agriculture. This house was to be well insulated, unusually durable and designed to permit disassembly by sections and reassembly at a new site.

This report describes the design and installation of thermal systems and all thermal components. In this chapter a brief discussion of the development of the original projects and their evolution as a joint effort will be presented.

Solar Habitat One

The Habitat, as originally envisioned, was to be a single story one family home with no basement. Some of its main objectives were[1]:

1) Low heating costs - The building would be more heavily insulated than is now customary in home construction.

2) Reduced construction costs - The basic structure would consist of a relatively small number of standardized parts capable of mass production; e.g. the floor would be constructed of forty-eight identical 4 ft x 8 ft x 8 in prefabricated sections.

3) Recyclability of materials and labor - Prefabricated sections would be fastened to support members using bolts. This would permit easier disassembly and more efficient recovery of materials than is now possible.

4) Transportability - The widest prefabricated sections would be 4 ft x 8 ft, easily grouped together and shipped by truck, train or barge.

5) Heat recovery by incoming ventilation air - The windows would from vertical channels through which incoming air would flow, picking up heat being passed out through the glass. A similar heat exchanger was contemplated using the entire wall. The final floor plan of Solar Habitat One is shown in Figure 1.

As originally designed, the heating system of Solar Habitat One consisted of a 60,000 BTU/hr LP-Gas-fired forced hot air furnace. The crawl space under the floor of the one-story building was to be sealed off from the outside. Hot air from the furnace would be fed to this crawl space (or plenum chamber). A 1/2 in slot around the perimeter of the living area was intended to distribute the heated air throughout the habitat.

This house was to be constructed using 2 in x 8 in beams set 8 ft apart as a primary joist. A secondary joist of paired 2 in x 8 in

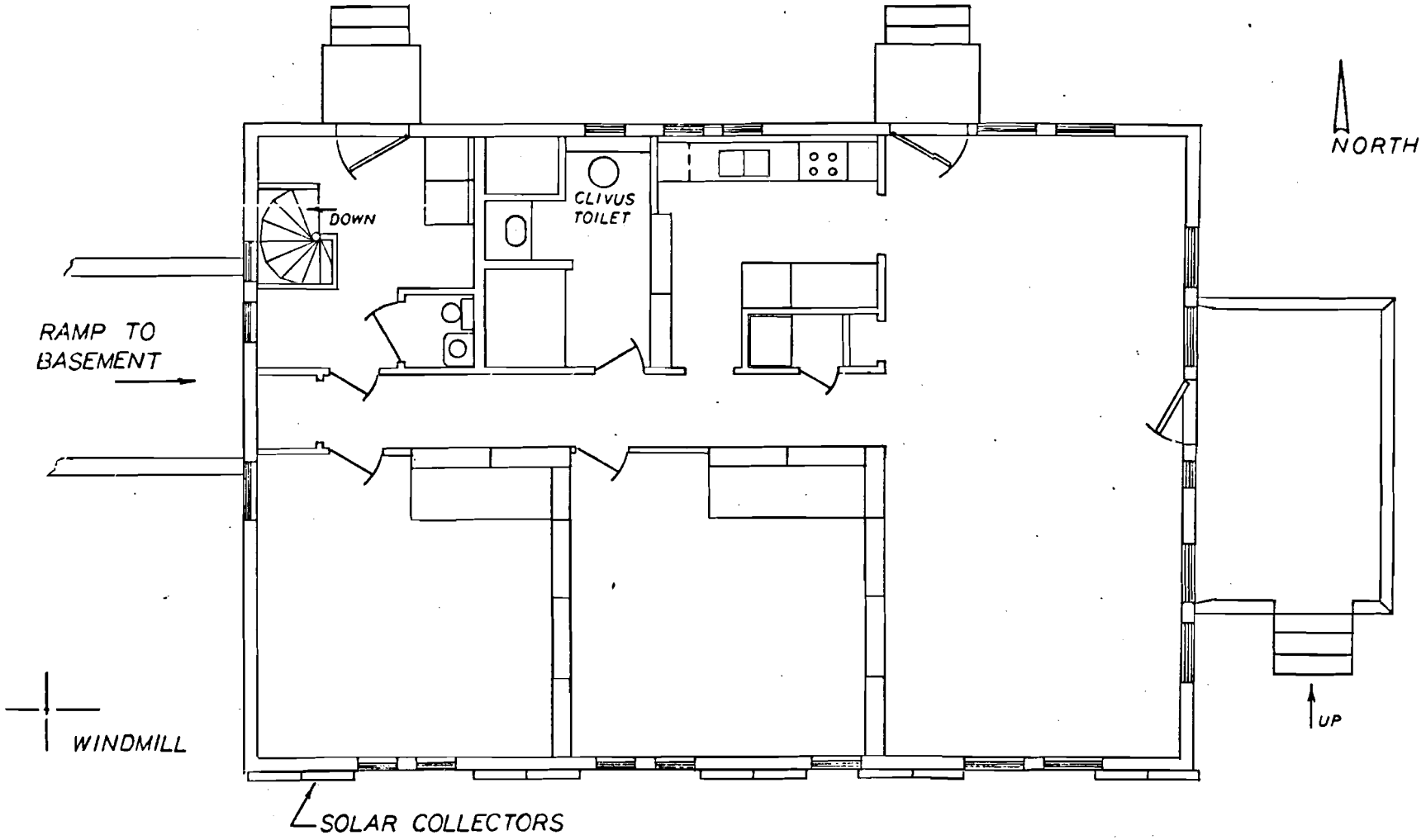

Figure 1 - Main Floor Plan of Solar Habitat One

ENERGY ALTERNATIVE PROGRAM

UNIVERSITY OF MASSACHUSETTS

UMASS SOLAR HABITAT-I

MAIN FLOOR PLAN

DRAWING NO. 07.01.003

DATE 6/18/76 DRN. BY D. CROMACK

beams enclosed in 4 ft x 8 ft sheets of plywood would form the main floor. The open areas between the upper and lower sheets of plywood would be filled with fiberglas insulation. The roof and walls were of similar construction. The overall dimensions of the house were 32 ft x 48 ft.

Using the Department of Agriculture grant previously mentioned, Professor Johnson and his assistants prefabricated the basic house structure before the overall project started.

The New England Wind Furnace Project

The basic concept behind the NEWF Project[2] was that a large portion of the energy required to heat a home could be provided by a 20 to 40 kW wind turbine generator (WTG) placed 80 ft above ground.

The WTG would have three blades and an overall blade diameter of 32.5 ft, blade pitch control, and a start-up wind speed of about 5 mph. The first model would reach rated power at a wind speed of 26.1 mph.

Several methods of delivering the generator's energy output to the home were considered. Means of directly connecting the generator to electric baseboard convectors or to electric water heaters in storage tanks were both designed into the heating system. In this second case heated water from the tank would be pumped through water baseboard convectors. Later models were to include a heat pump and/or mechanical churn and solar collectors. A domestic hot water preheating option was planned to permit use of the WTG and/or solar collector output during summer months.

The size and complexity of the Wind Furnace Project and the breadth of expertise it demanded made a large project team and detailed organization essential. Professor William E. Heronemus, the originator and Principal Investigator of this project, set up an administrative structure as shown in Figure 2. Briefly, the emphasis of each group was as follows:

00) Project Management and System Integration - Coordinate work in progress and future planning between groups. Submit all reports, budgets and administrative work required of the project.

01) Support Structures - Design and install the support structures for the WTG.

02) Momentum Exchange Devices - Conduct dynamic and aerodynamic analyses as required, design and install windmill blades, gearing, power shafts, brakes, etc.

03) Electrical Systems, Sensors and Controls - Reponsible for generator, load controller and pitch controller research, design and installation.

04) Thermal and Solar Components and Systems - Set up computer simulation of all prospective systems. Design, purchase materials for and install each system. Collect environmental data at building site.

05) Manufacturing Engineering - Analyze system installation problems and the methods and tools required to set up NEWFS in a number of typical residential situations.

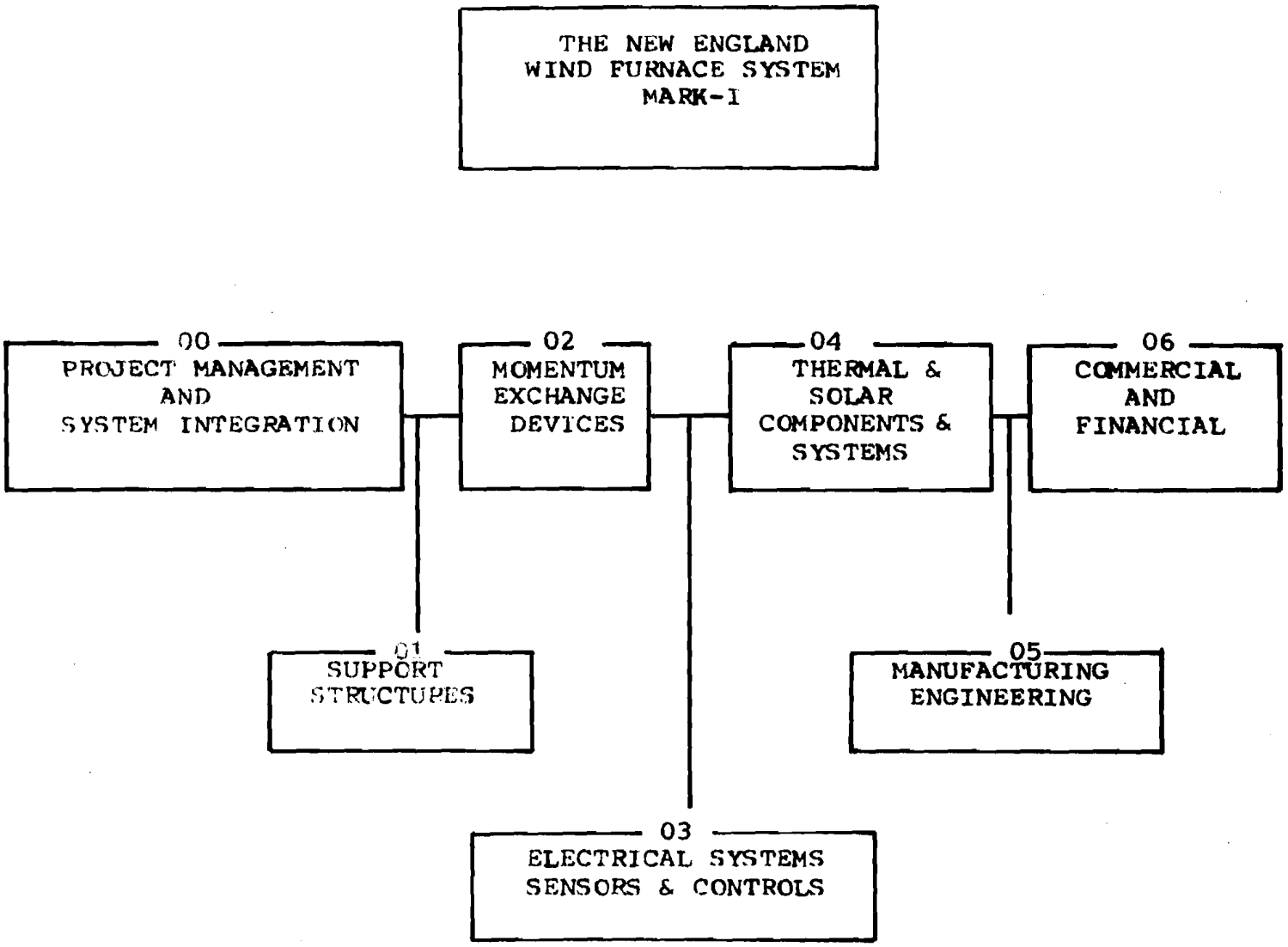

Figure 2 - Original NEWF Management Chart[2]

06) Commerical and Financial - Examine the market potential, financing methods and competitive aspects of a NEWF industry.

This organization was expanded and revised as needed during the progress of the project. Also, as will be discussed, this report will concentrate on the 04 group, Thermal and Solar Components and Systems.

The Combined Effort

In the spring of 1975 the NEWF project group began working with Professor Johnson to integrate an alternative heating system into Solar Habitat One. Since that time, a general design for the house and its heating system was developed. The ogranizational structure of the joint effort was detailed and finalized as shown in Figure 3.

It soon became apparent that the Habitat design would have to be modified to include a basement due to the need for large water thermal energy storage tanks and extensive laboratory facilities at the building location. The basement laboratory floor plan and site plan are shown in Figures 4 and 5 respectively. With the exception of the heating systems, the need for modification of the Habitat building was relatively small.

The building was originally intended for location at a UMass facility some distance from the main campus. To facilitiate public access and to have better wind conditions, the building site was changed to Orchard Hill on the University of Massachusetts Campus.

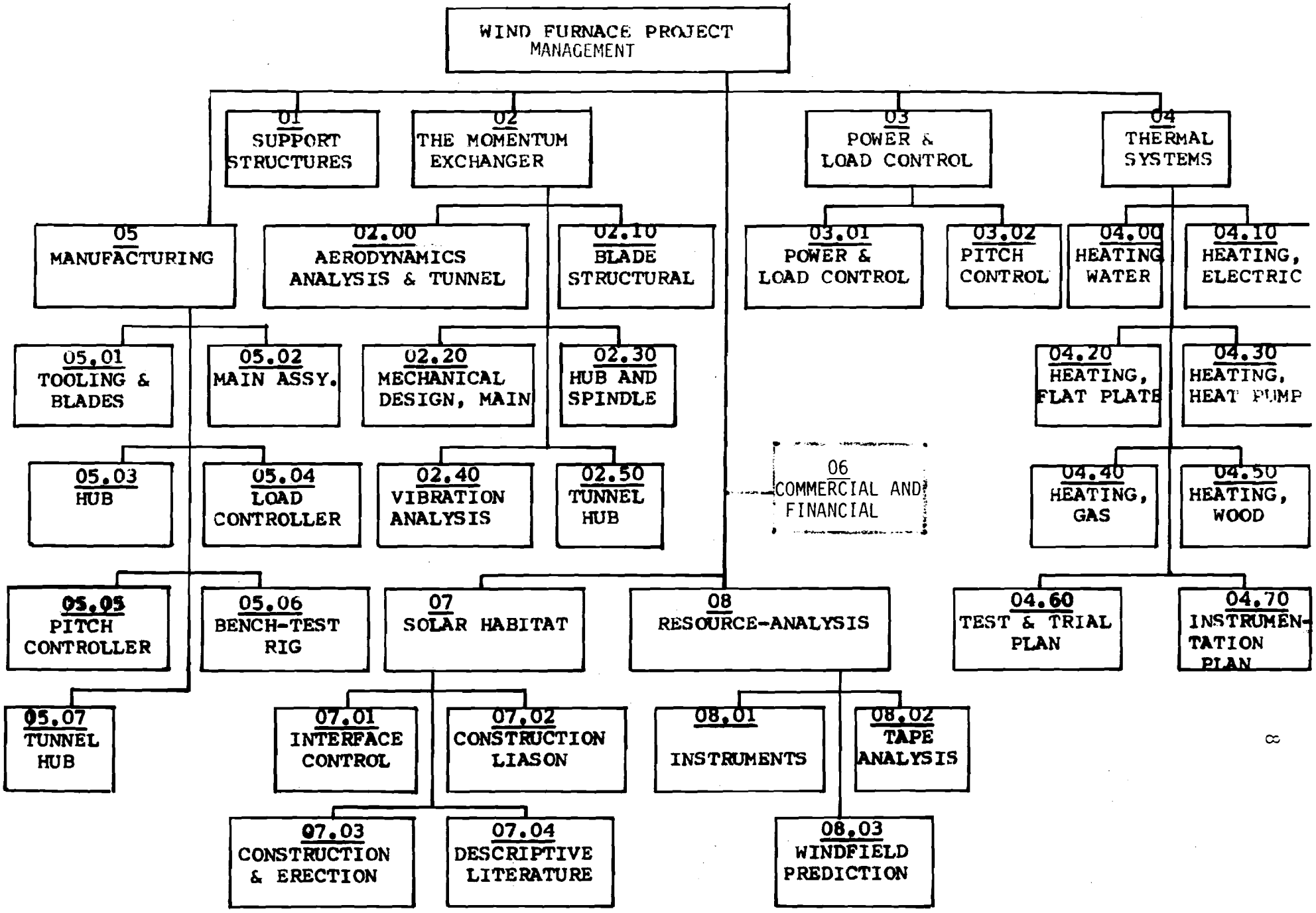

Figure 3 - Wind Furnace Project (First Year)

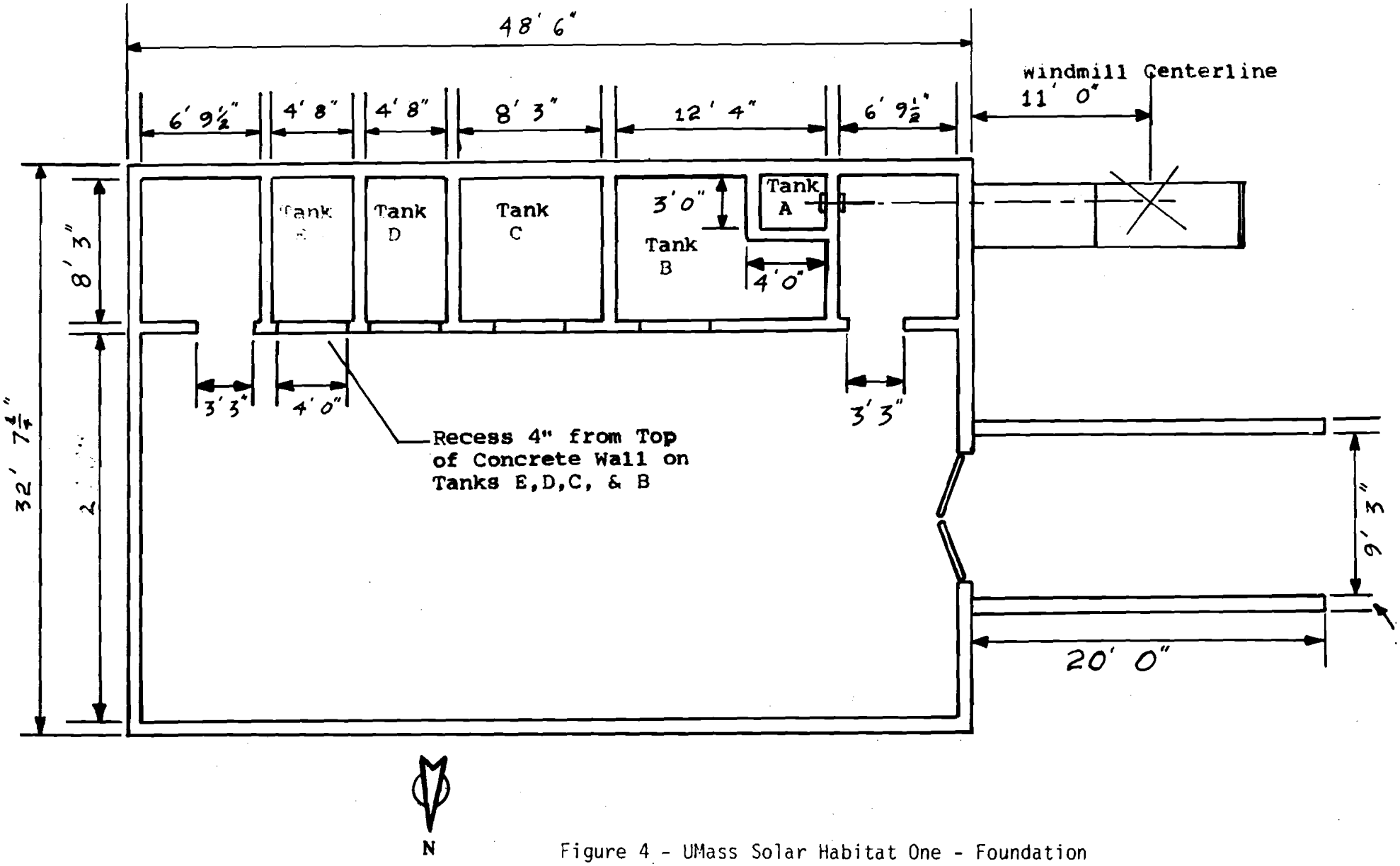

Figure 4 - UMass Solar Habitat One - Foundation and Basement Laboratory

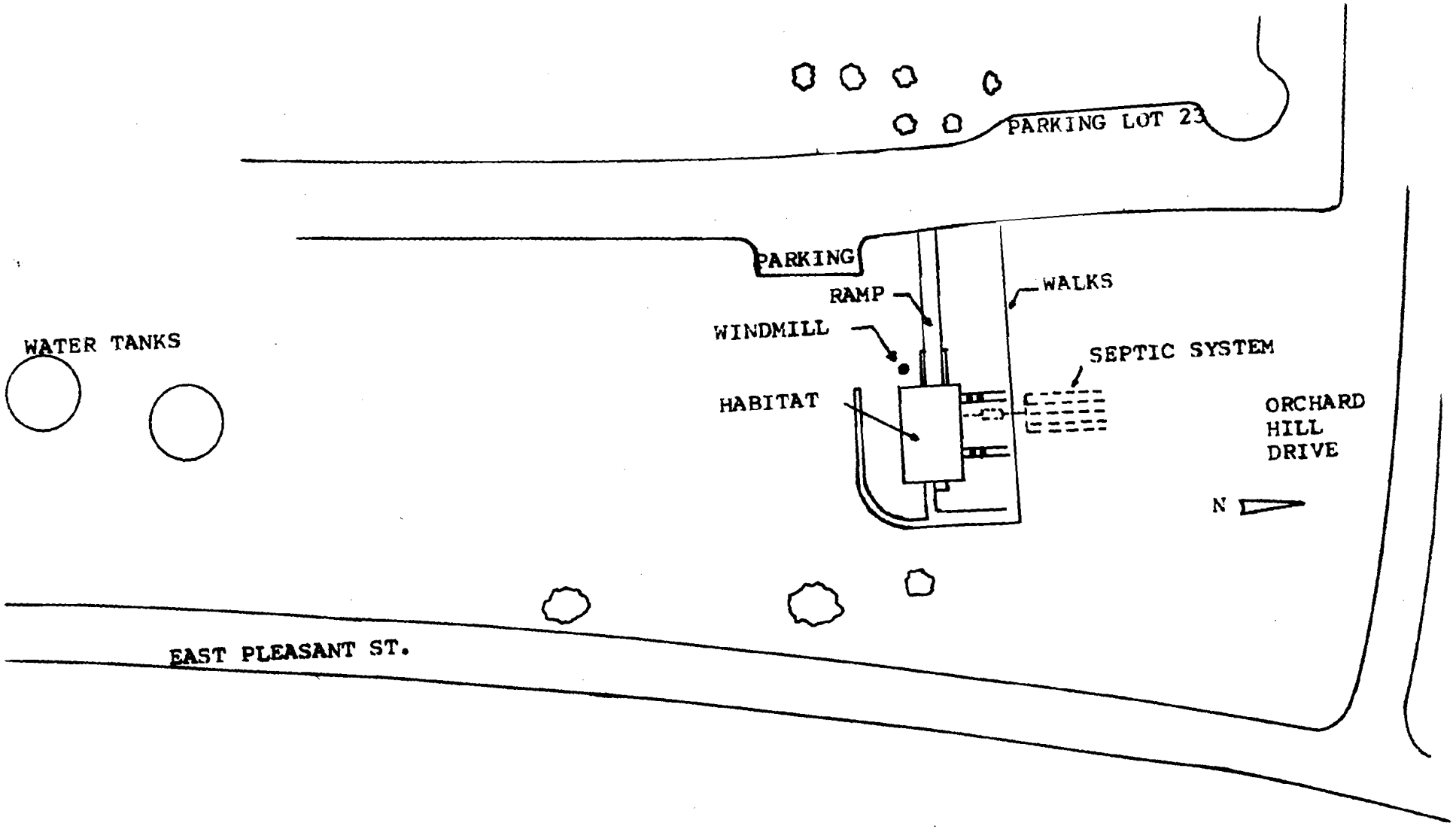

Figure 5 - UMass Solar Habitat Site Plan

At present the foundation, building and interior are essentially finished. The solar collector loops and water baseboard convectors are in operation. The 60 ft stayed pole on which the windmill generator will stand has been raised in a trial run and final checkout of the windmill generator and power train are nearing completion.

Several months were spent interfacing the thermal systems of the NEWF Project with those originally intended in Solar Habitat One. The final design of Solar Habitat One/NEWF thermal systems will be described in detail in chapters III through VI of this report.

Figure 6, an artist's conception, shows the combined site layout of Solar Habitat One and the New England Wind Furnace. A recent photograph of the building with the solar collectors in place is presented in Figure 7.

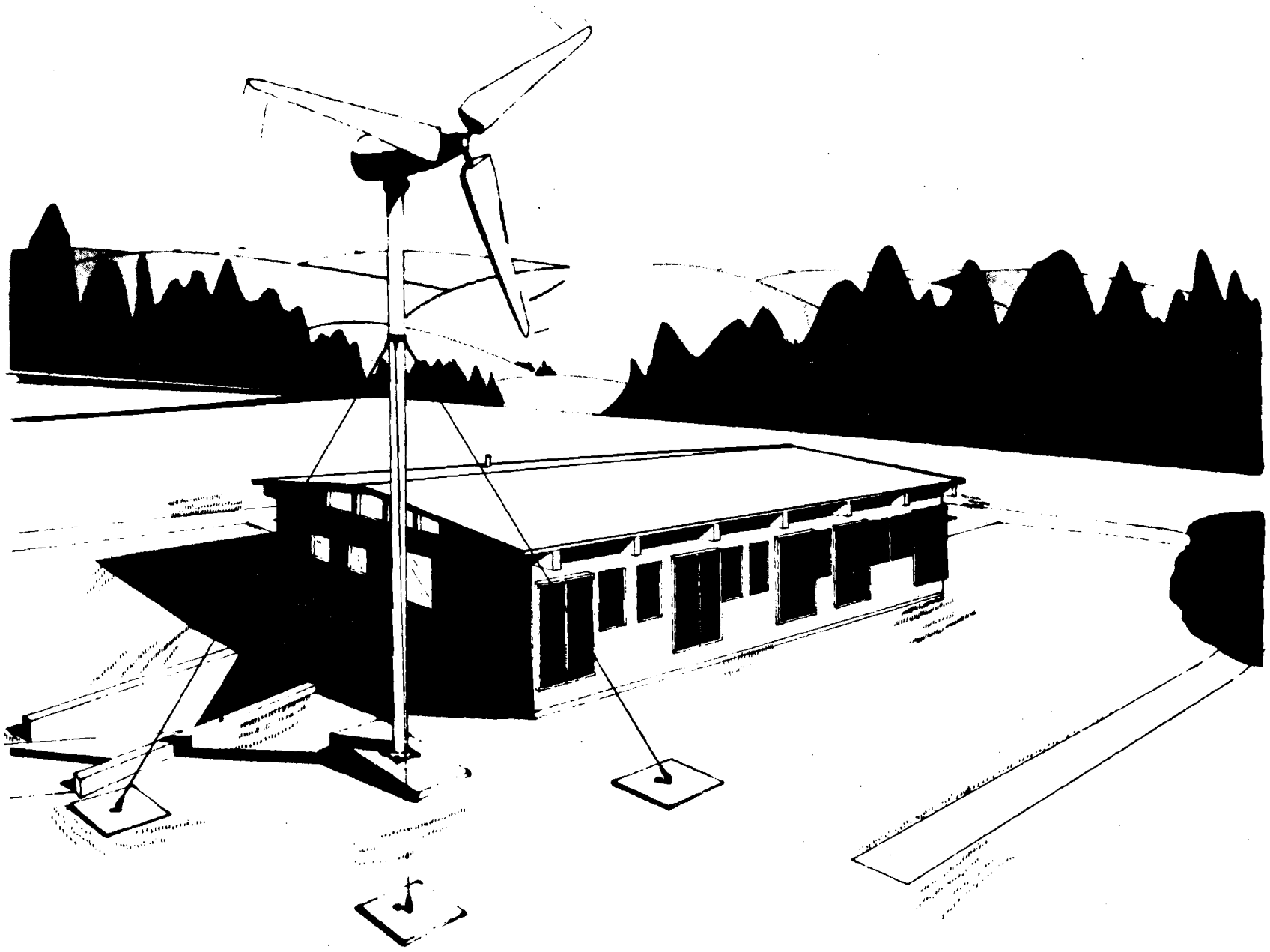

Figure 6 - Artist's Conception of Solar Habitat One and NEWF

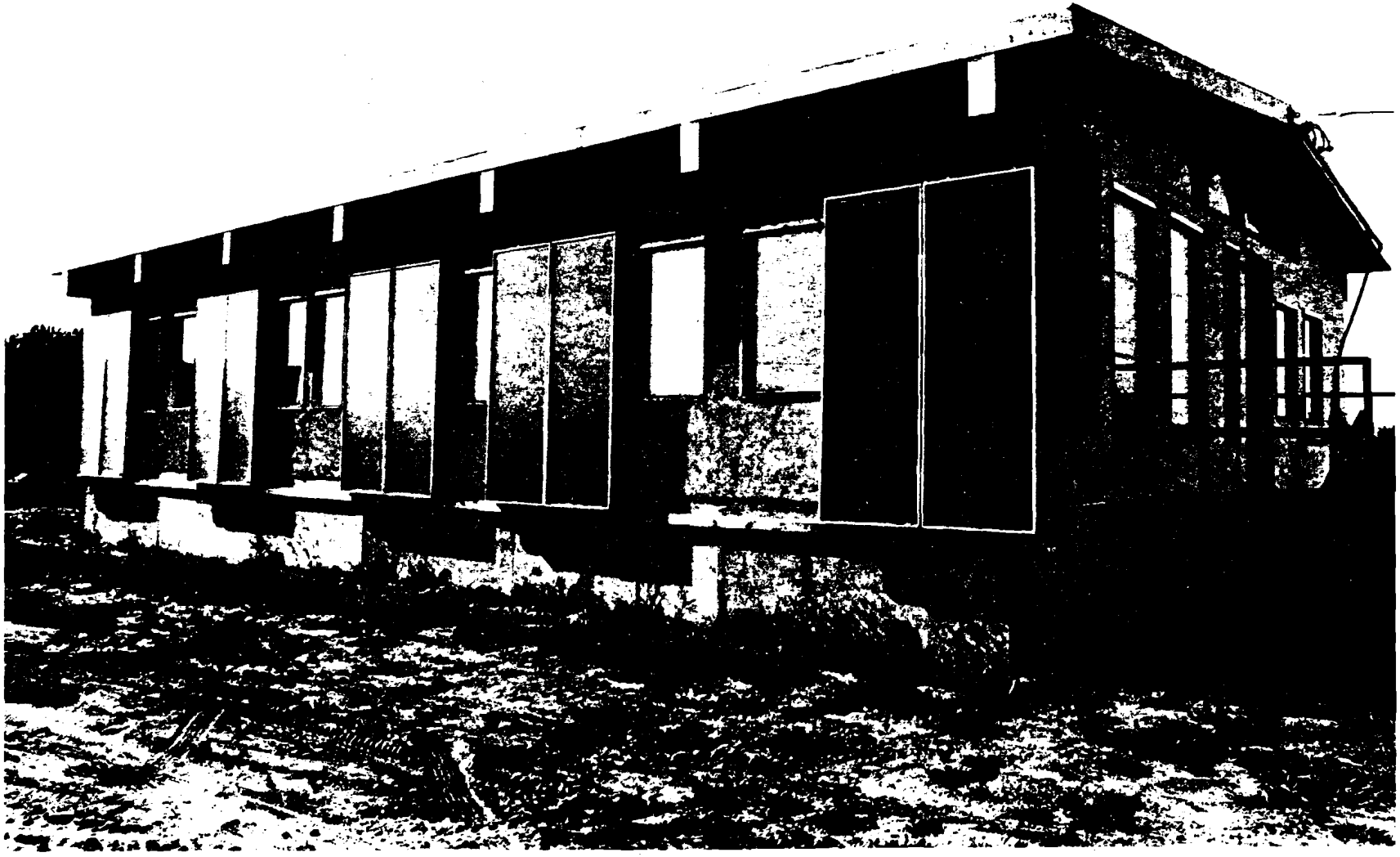

Figure 7 - Solar Habitat One - South Wall

CHAPTER II

OBJECTIVES

The main purpose of this project has been to design, purchase materials for, install, and check out a heating system for Solar Habitat One using the output from the New England Wind Furnace Project's 25 kW WTG augmented by 200 ft^2 of flat plate solar collectors. This 200 ft^2 area was less than desired but the physical layout of the house prevented installation of additional collectors. This combined system must be capable of heating the house using a number of different energy collection and distribution methods.

Specific Objectives of the Project

1) Design a versatile experimental heating system for Solar Habitat One based on the results of a computer modeling study[3] and the physical constraints of the house.

2) Procure all required materials and parts necessary to assemble all heating systems.

3) Install heating systems in Solar Habitat One.

4) Set up and execute preliminary checkout tests of each subsystem.

5) Prepare and submit a final report (to be used as a technical report) giving complete details of systems, components, switching logic and instrumentation.

Methods

The means employed to achieve the above objectives were as follows.

Multiple Storage Tanks. As previously shown in Figure 4, five water storage tanks were built into the basement of Solar Habitat One. These concrete tanks have storage capacities varying between 500 gal (tank A) and 3500 gal (tank B). In addition to being able to adjust storage size, the several tanks can be used for insulation economics experiments. For example, the two 1000 gal tanks (D and E) can be insulated with different materials and comparisons of their performance versus cost characteristics can be analyzed.

Another advantage of the multiple storage is that it permits operation of the solar collector loop independently of the wind turbine generator. Solar collector performance is a strong function of collector water inlet temperature[4]. If both the WTG and the collectors are connected to the same storage, the more energy the WTG collects, the higher the water temperature will rise and the worse the solar collectors will perform. With a small storage capacity, one simple way to avoid this problem would be to use a separate solar collector storage for home heating during the day, and the WTG storage for heating at night.

Inclusion of Computer Results in the Design. The results of a computer modeling study[3] conducted by the thermal systems group indicated that an adequate water storage size for Solar Habitat One would be 2000 gal. A graphical representation of this result is contained in Figure 8. (An eighty ft tower was used, however, results are

similar for a 60 ft tower.)

The most efficient delivery system, according to the computer program, would use 100 linear feet of water baseboard convectors. These results, and others yielded from the mathematical model were used for the design of the Solar Habitat heating system.

Flow Rate Variations. All fluid loops in the solar collector and water baseboard systems are equipped with bypass valves, permitting variation of flow above and below the design operating point of each loop. This feature can be used to search for optimum flows under various conditions and to more accurately size the pumping requirements of each system.

Variety of Energy Collection and Delivery Methods. The computer model mentioned above showed a poor match between the period of highest heating demand and maximum WTG productivity. This data (summarized in Figure 9) also raised the possibility that 200 ft^2 of solar collector could bring the heating supply and demand of the house much closer to a balance. Because of this, combined wind and solar heating systems were installed in Solar Habitat One. The presence of both systems also made it possible to study the economic and efficiency trade-offs between the two methods of energy collection.

Although it did not appear very promising in terms of overall energy utilization, linking the windmill output directly to electric resistance baseboard heaters was considered. As an independent system this had the drawback of no storage capability. However, a distinct

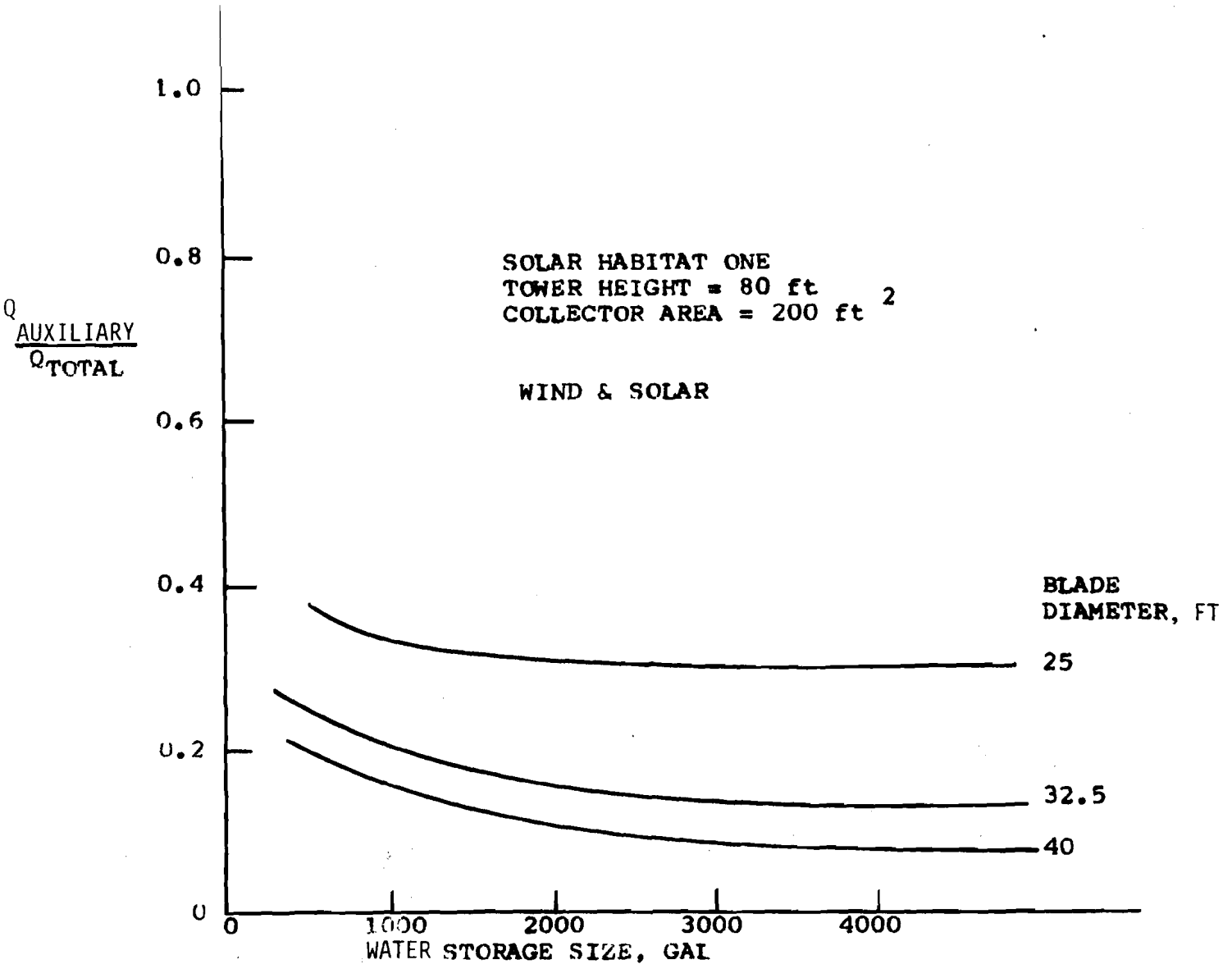

Figure 8 - Effect of Storage Size on Auxiliary Energy Requirements of Wind Heating System with Thermal Storage[3]

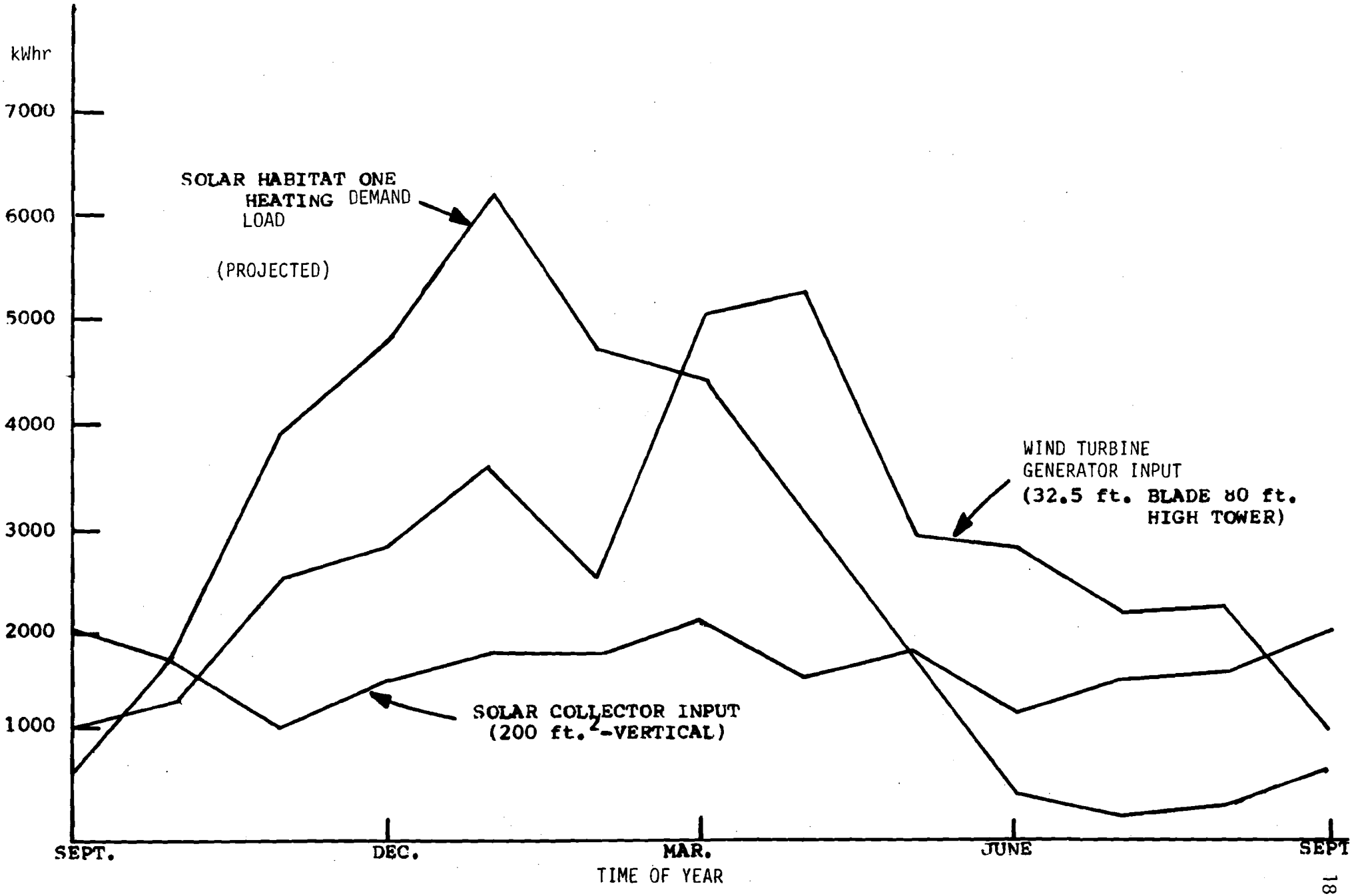

Figure 9 - Energy Inputs and Monthly System Heating Load (kWhr)

economic advantage due to lower installation cost could be realized. A full set of electric baseboard convectors was included in the design in addition to the water convectors.

Availability of Components. A major expense in alternative energy systems is the requirement for specialized equipment to perform specific functions. With the exception of the solar collector panels and the windmill assembly, the entire heating system of Solar Habitat One consists of mass produced items readily available through retail outlets. It should be pointed out that, in some cases, conventional equipment is not normally operated at NEWF design specifications. Performance capabilities of this equipment were estimated at NEWF design points. For example, water baseboard convectors are generally used at about 180°F but the Habitat convectors needed to operate at significantly lower average temperatures. Using basic heat transfer principles, the thermal systems group extrapolated convector design figures to the lower temperature and specified additional heater length. Similar adaptations were involved in other areas where interfacing between the alternative collection systems and conventional heating equipment was a problem.

Goals

Flexibility in energy collection, storage and distribution was designed into Solar Habitat One's heating capabilities wherever practicable. Upon its completion this project will have made available a laboratory for testing several different methods of alternative energy

home heating. Thus, future researchers at UMass will be able to test the efficiency and economics of solar and windpowered heating using a variety of components and component sizes.

It is hoped that the Wind Furnace Project will provide definitive information about the economic and environmental value of alternative energy systems. The Habitat should give students and the public an introduction to the practical aspects of installation and operation of these systems.

CHAPTER III

HEATING SYSTEM DESIGN

The methods of heating Solar Habitat One, as presently installed, can be broken down into two parallel heating modes. They are referred to in this report as the alternative system and the auxiliary system. The wind and solar energy collection, storage and distribution systems fall into the former category. The forced air furnace and peripheral air distribution slots make up the latter. This chapter will outline the operation of each heating system and will detail the major components.

The Alternative Heating Systems

At present there are four wind and solar powered systems installed in the Habitat. Their general operation is described below

Model 1A. (Figure 10) This model uses the power produced by a nominal 25 kW generator mounted in the main frame of a WTG with its center axis 60 feet above ground. Power is fed to a load controller in the basement of Solar Habitat One. The central control system monitors the temperature inside the house. If the WTG is providing power and heat is required by the house, the control system connects the load controller to a set of nine 10 ft electric resistance baseboard convectors distributed throughout the building. If heat is not needed the central control system feathers the wind turbine's blades and shuts down the electric field in the generator. If the wind turbine generator is not producing power and the house temperature falls

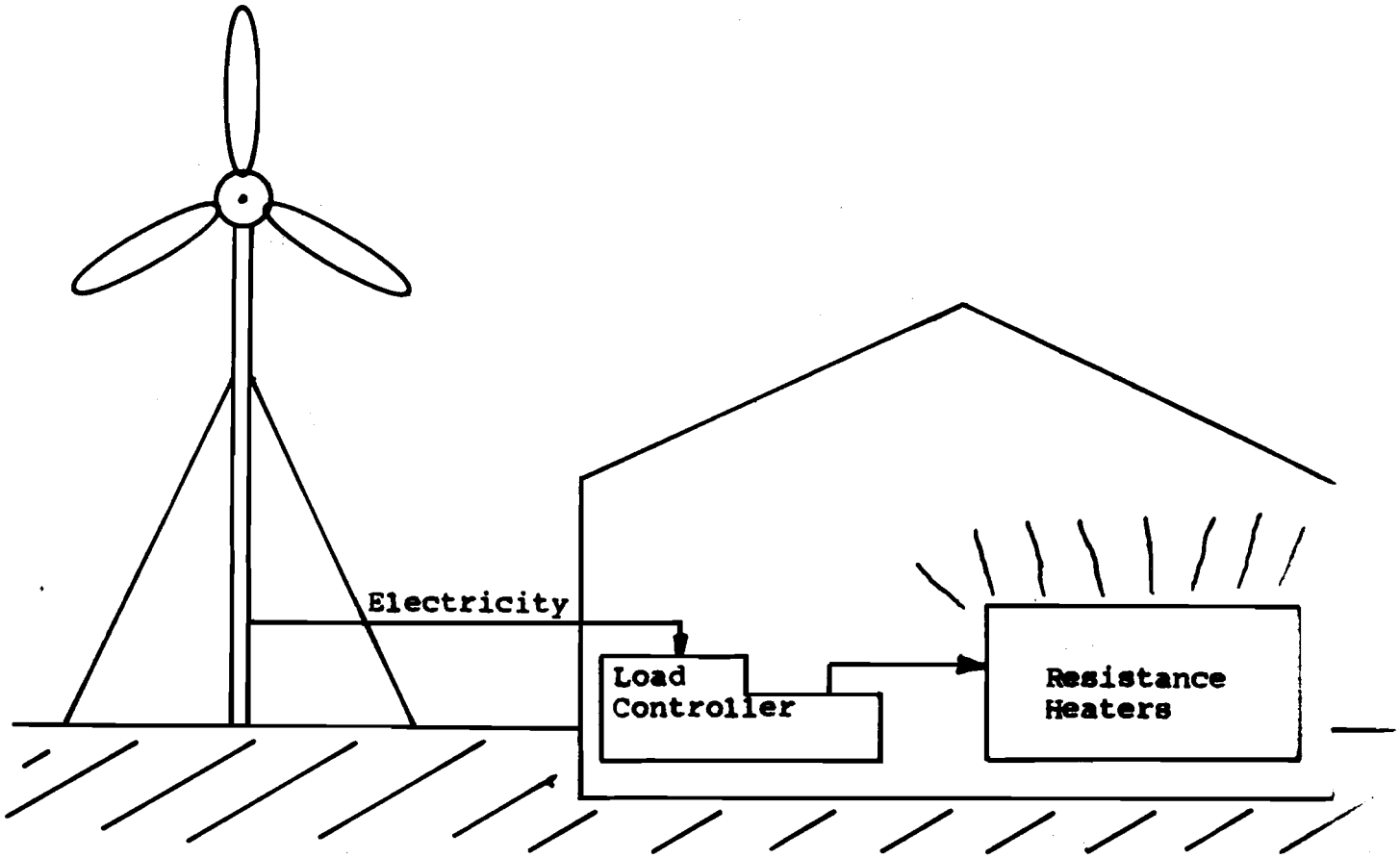

Figure 10 - Model 1A. Wind Turbine Generator and Electric Baseboards (No Storage)

below acceptable levels, the auxiliary system takes over and provides forced hot air heating.

Model 2. (Figure 11) This approach incorporates a storage capability into the wind system. Instead of being delivered directly to electric baseboard convectors, the power output of the WTG is used to heat water in a concrete storage tank in the basement of Solar Habitat One. This is accomplished by feeding the power output of the WTG to a set of electric immersion heaters in the tank. When the water temperature in the tank rises above 194°F the controller again sends out a signal which causes the blades to feather and the electric field to be shut down. When heat is required by the house, water is circulated through water baseboard convectors. If there is not sufficient tank temperature to maintain desired temperature levels, the auxiliary system is again employed.

Model 3A. (Figure 12) This system is the same as model 2, with the addition of solar flat plate collector output to the water tank.

The solar collector loop is actually two separate fluid circuits. Because of the danger of water freezing in the collectors on winter nights, the collection fluid is a 60/40 solution of propylene glycol antifreeze and water. Propylene glycol was chosen because it is less toxic than ethylene glycol. Filling the storage tank with this solution would be prohibitively expensive, so a heat exchanger is used between the collector fluid and the tank water. A double-loop arrangement such as this entails some small penalties in first-cost and in overall performance but it was felt that this course was preferable

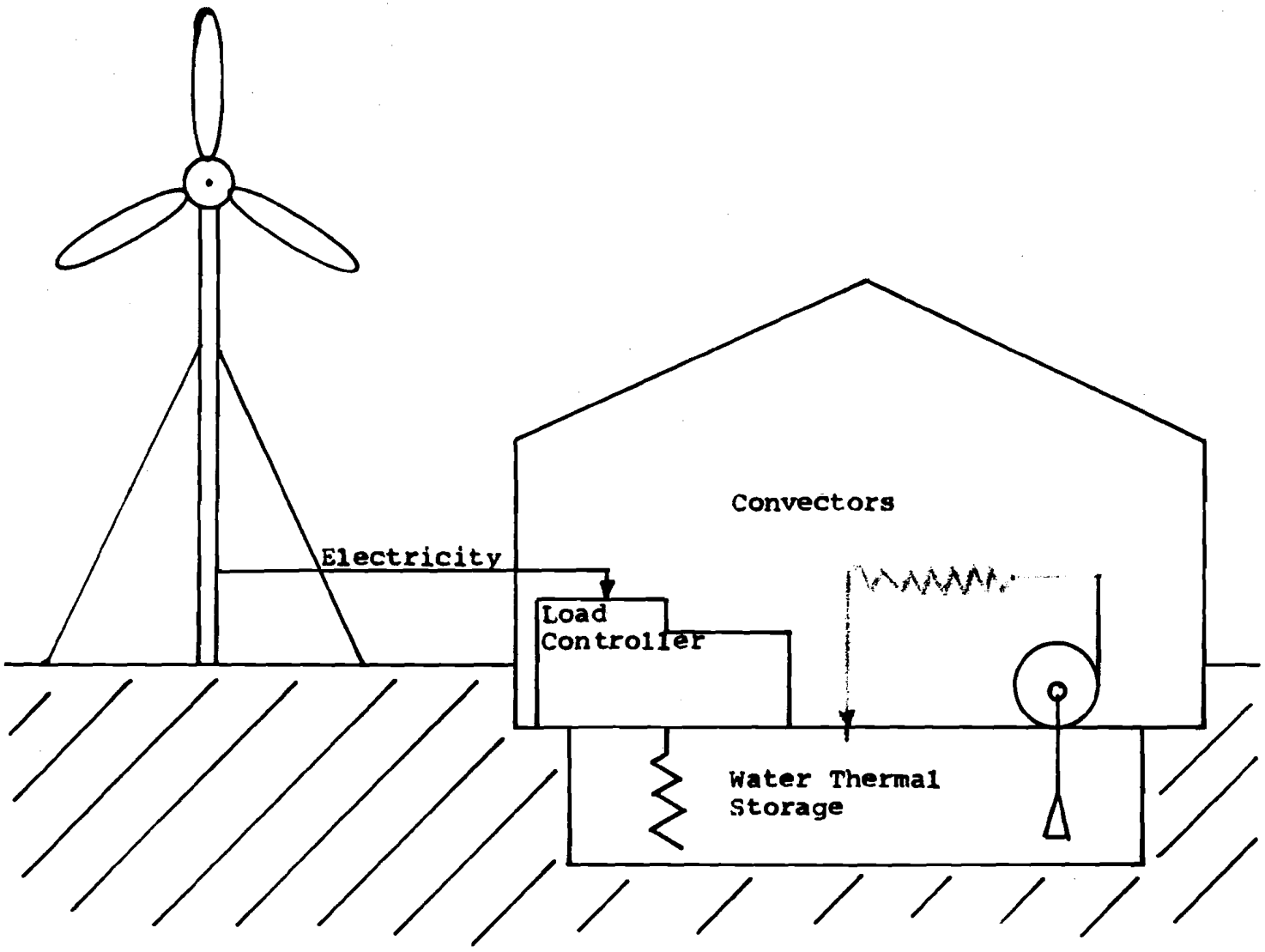

Figure 11 - Model 2. WTG, Water Storage, Water Baseboards

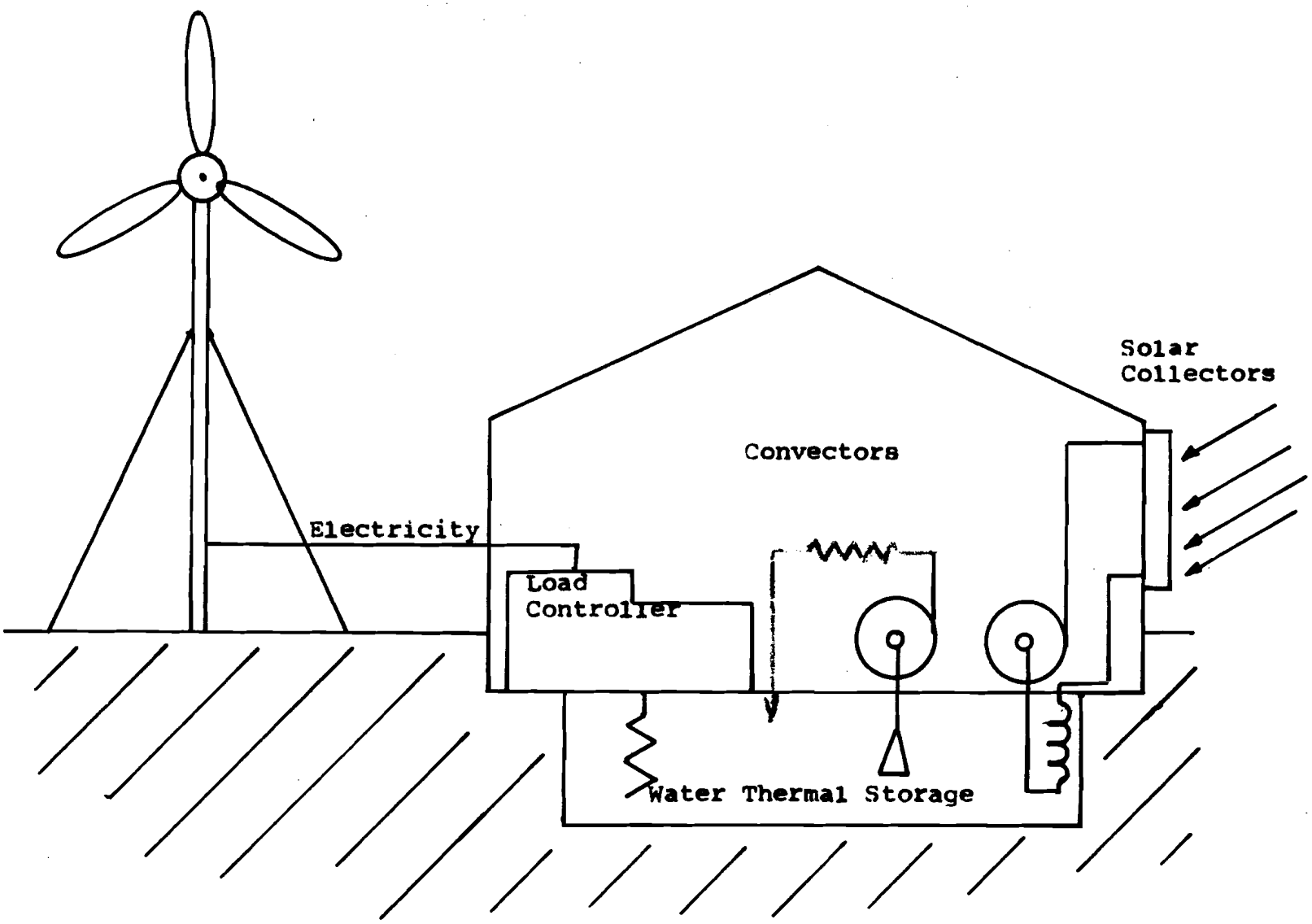

Figure 12 - Model 3A. WTG and Collectors with Combined Storage, Water Baseboard Convectors

to (or constant circulation in winter) system drainage or purging methods. A detailed discussion of this type of solar collection system is presented in Reference 5. A differential thermostat is used to control fluid flow on both sides of the heat exchanger. This thermostat turns the pumps on when the collector's fluid is 20°F hotter than the tank water and turns them off when this difference rops to 3°F. This differential thermostat is independent of the switching logic, but has no mechanism to close the loop down when the tank temperature rises to 194°F.

Model 3B. (Figure 13) The one-tank storage of Model 3A has the drawback that solar collector efficiency is a function of storage water temperature (or more precisely, collector inlet temperature) while windmill power output is not. As dicussed previously, the contribution of the collectors could easily be reduced on days when the WTG is performing well and the storage tank is at a high temperature. For this reason, capability for a two-tank independent storage system has been provided. In this arrangement the solar collector loop heats one tank from which heat is drawn when needed. The electric immersion heaters are placed in a different tank and that tank's water is used only when the solar collector storage tank is too cool to satisfy heating requirements.

The Auxiliary System

The house, as originally designed by Professor Johnson, was a single story one-family dwelling with a 3 ft crawl space between the main floor and the ground. This crawl space was intended to be sealed off from the outside. Provisions were made for a 1/2 in slot around

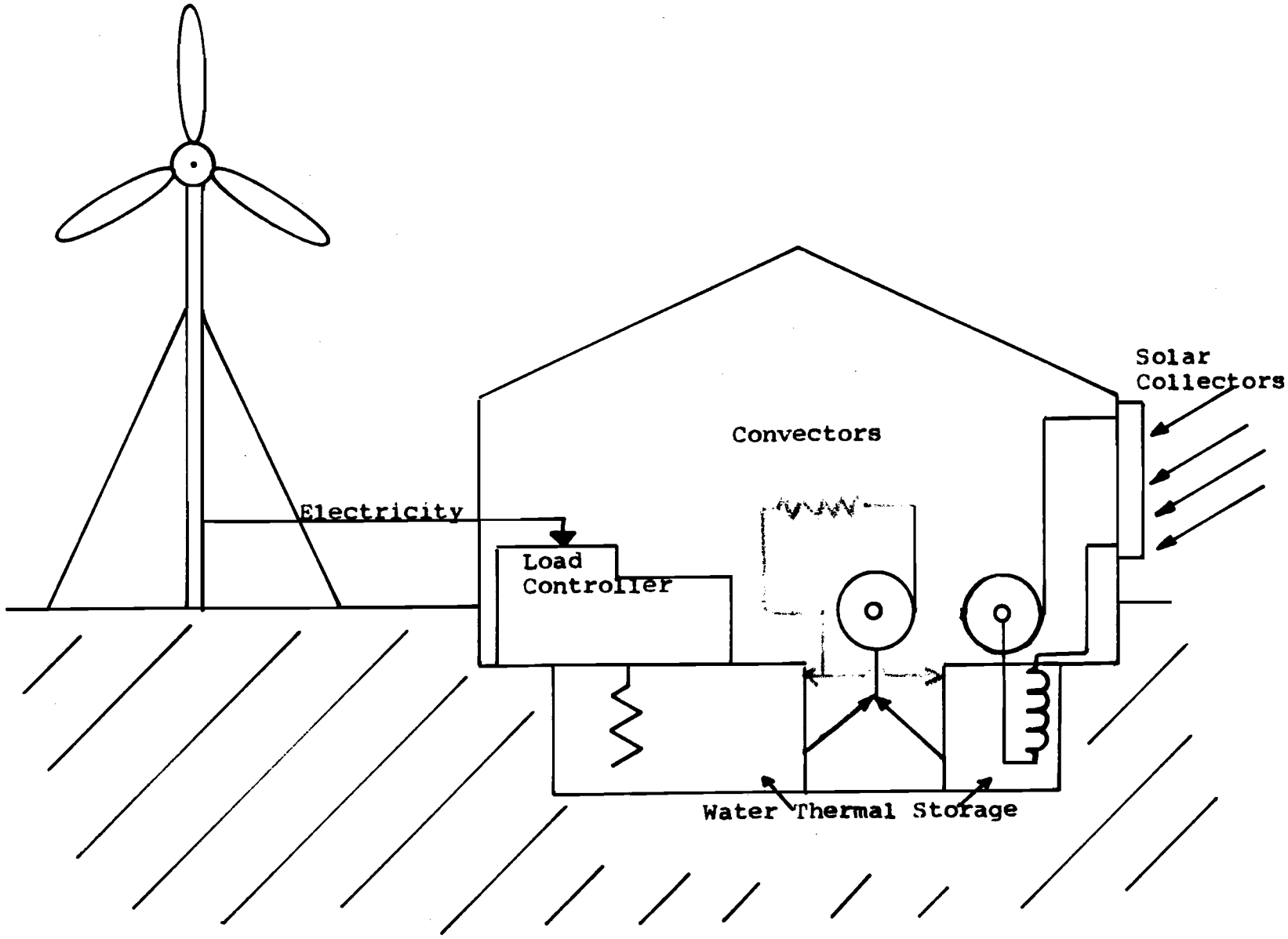

Figure 13 - Model 3B. WTG and Collector with Separate Storage, Water Baseboard Convectors

the perimeter of the main floor and an LP-Gas-Fired forced-air furnace was to be installed on the main floor. This furnace would direct heated air down into the crawl space, or "plenum chamber", and the air would then rise through the slots around the main floor periphery, providing heat to the living area.

As solar and windpowered heating systems were integrated into the Habitat plans, it became apparent that a laboratory area and several water storage tanks would be needed at the building site. To meet these requirements a basement was added to the original design. The effect of this modification, in terms of the auxiliary heating system, was to increase the size of the plenum chamber from a 3 ft crawl space to a full basement.

In its present form, the auxiliary heating system is a 60,000 BTU/hr LP-Gas-fired forced hot air furnace which downdrafts into the basement. This air from the furnace directly heats the basement and rises through slots around the perimeter of the main floor to heat the living area. Depending on system performance, future work may involve modification of this heating delivery system. A baffle plate and air ducts may be necessary to improve air distribution.

Alternative Heating Components

Wind Turbine Generator. Efforts concerning the WTG frame support structure, blades and generator were handled by another part of the NEWF team. The generator, a 25 kW Lima Synchronous, Externally-Regulated, three-phase AC machine, was housed in a main frame assembly designed and built by the O1 group. The three blades[6] are each 16 ft

long and are attached to the hub with a 12.5 in steel sleeve. The mast[7] is made of 10 inch diameter 3/8 in wall welded steel pipe and is guyed by cable to four concrete anchors. Additional information on this aspect of the project can be obtained from References 1, 2, 6, and 7.

Load Controller and Central Control System. These items were designed and constructed by the 03 group. A detailed discussion of the load controller is contained in Reference 8. The switching logic governing the central control system is included as Appendix A.

Electric Baseboard Convectors. The nine electric baseboard convectors, each ten feet long, were made with slightly different resistances than are customary in home heating applications. The normal resistance of these heaters is 3.07 ohms per linear foot as compared with the modified convector resistance of 3.18 ohms per linear foot. The resistance was changed so that their characteristics and those of the electric immersion heaters would be nearly identical.

The nine convectors together have the capability to take the full 25 kW output of the wind turbine generator. This is considerably in the worst design point, 70°F interior temperature at 0°F outside temperature. The excess heating capacity provides a means of making up temporary decreases in living area temperature.

Electric Immersion Heaters. The portable electric immersion heaters designed and constructed by the 03 group consist of twelve electric water heater elements in three 1 1/4" galvanized steel riser pipes. The complete assembly of one riser is shown in Figures

14 and 15. Each riser contains two 4 kW and two 1.65 kW elements. Operated together, the three risers have more than the 25 kW capacity of the WTG.

Water Storage Tanks. The storage tanks of Solar Habitat One are laid out as previously shown in Figure 4. The entire foundation including all tank walls is reinforced concrete. The interior tank walls are 8 in thick and the floor is 4 in. The south wall of the basement, which forms the rear wall of each tank is 11 in thick. There is 3 in of urethane insulation under the basement floor and 2 in outside the walls. There is at present no insulation on the 8 in interior walls. This is mostly due to economic and technical assistance constraints on the project.

The tank covers were built as follows. Sills of 2 in x 6 in beams were bolted on top of the cement walls forming three sides of the tank. The 4 ft 3 in between the south wall and the middle of the tank was covered with a permanent platform of 2 in x 4 in studs covered on top and bottom by 3/4 in plywood and packed with polyurethane board insulation. The 4 ft span between the platform and the front wall of the tank is covered by a lid of similar construction hinged to the platform. Figure 16 shows the cover for tank C in place.

Water Baseboard Convectors. The manufacturer's information concerning water baseboard heater performance deals with the normal operating range of 160-220°F. Using that data, an overall thermal conductance for the baseboard heaters was estimated at 1.43 BTU/hr ft^2°F.

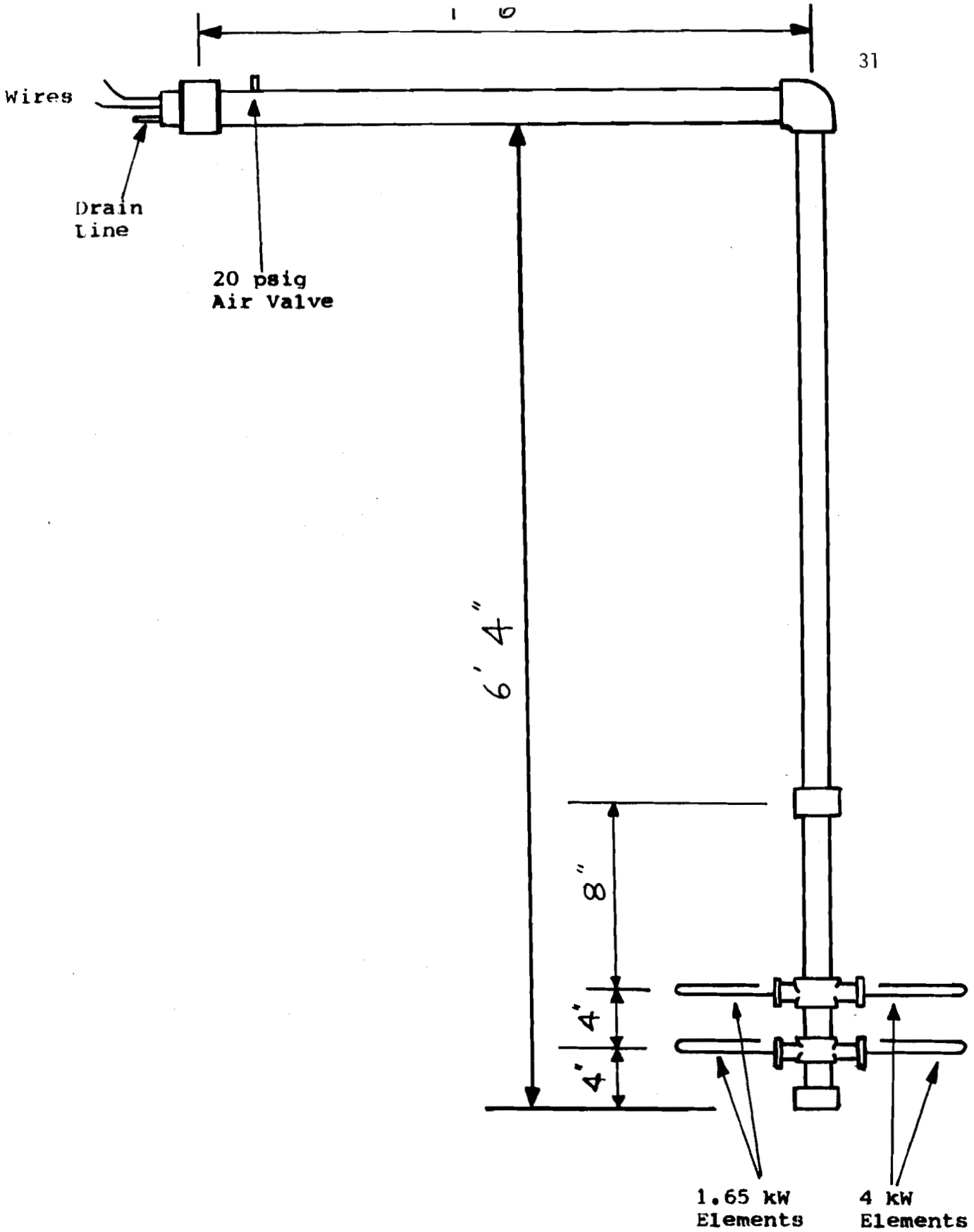

Figure 14 - Electric Immersion Heater

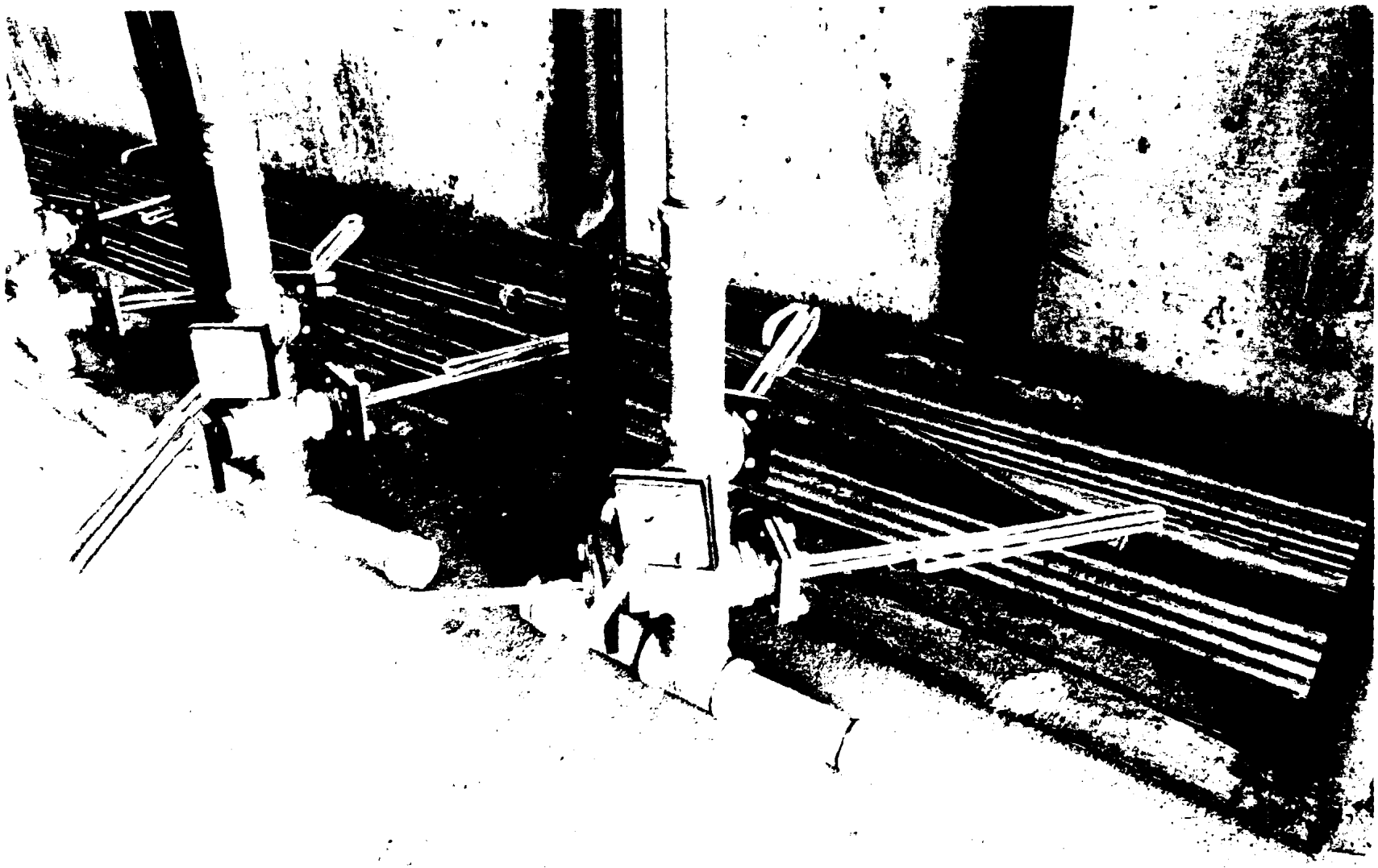

Figure 15 - Electric Immersion Heater Group

Figure 16 - Tank Cover

Assuming that in this case the outside heat transfer coefficient dominates heats transfer and that this coefficient is proportional to the temperature gradient to the 1.25 power[9], the performance curve of Figure 17 was extrapolated from the manufacturer's performance data. (See also Table 1) Analytical modeling indicated that the output of any more than 100 ft of baseboard convectors did not justify the added expense involved. About 100 ft of electrical baseboard heaters were already planned, so to prevent the living area walls from being filled with heaters, a double-element water baseboard heater was used. Interaction between the upper and lower elements reduced the expected improvement in output from 100% to 50%. To compensate for this and to obtain zoned heating, these convectors were set up in three parallel loops. Such an arrangement, giving shorter flow paths for the water and therefore a higher average temperature difference between the water and room air, provides an increase in heat over one 100' long loop.

Water Convector Pumps. Head losses in the three water baseboard convector loops were calculated at seven, twelve and eighteen feet of water at 4 gallons per minute. Centrifugal pumps of 1/12, 1/8, and 1/8 hp were purchased to handle these three baseboard convector loops. Each pump was installed with a bypass valve which permitted water to flow from the outlet of the pump to its inlet. This makes possible a wide variation of the flow through each loop for purposes of experimentation.

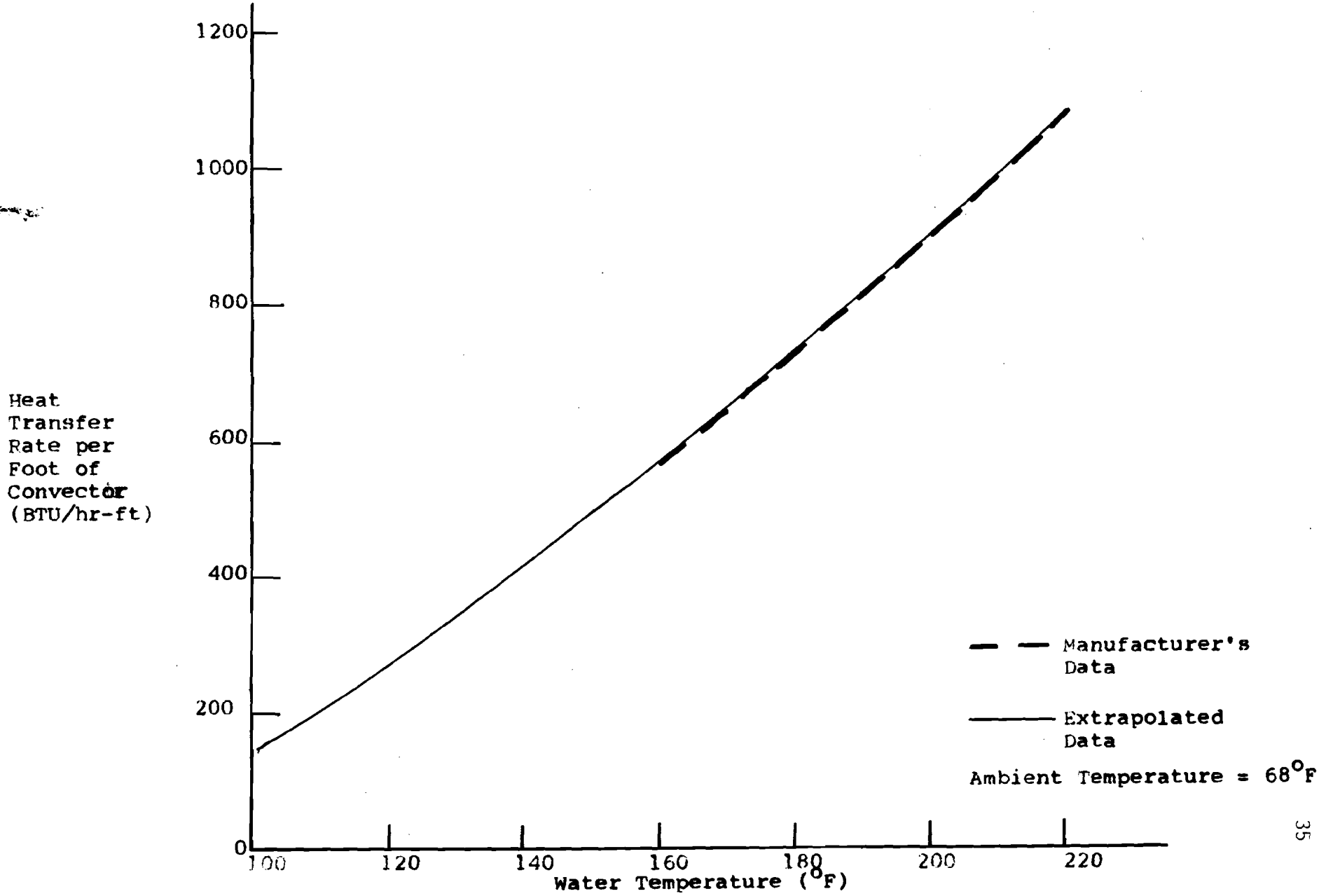

Figure 17 - Baseboard Convector

TABLE 1

Estimated Baseboard Convector

Performance (70°F Living Area)

Water Temperature (°F)	Output (Manufacturers Data)	Output (04 Group Calculations[9]) Data
220	1080	1079.0
210	990	991.3
200	910	904.8
190	820	820.0
180	740	736.8
170	650	655.5
160	570	576.2
150	unspecified (below normal operation range)	499.0
140		424.0
130		351.8
120		282.4
110		216.2
100		153.9

Solar Collectors. Each of the ten collectors mounted on Solar Habitat One is 32 in wide by 90 in long including the frame. The collection surface is a .013 in copper sheet painted with flat black paint. The collection fluid flows into a 3/4 in O.D. copper header which distributes it amount six 3/8 in O.D. vertical tubes soldered on the copper sheet. A 3/4 in O.D. copper header at the bottom of the tubes collects the heated fluid which then flows to a heat exchanger in the basement of Solar Habitat One. The copper sheet is covered by a Tedlar (DuPont trademark) plastic sheet and 1/8 in pane of ASG tempered high transmissivity glass. Two inches of fiberglas insulation are placed behind the copper sheet to cut down on heat losses. Each collector has a 1/4in purge valve at its highest point to clear the loop of air.

An analytical study[10] of the collectors was carried out using procedures described in Reference 4. The range of efficiencies for various fluid inlet temperature is shown in Figure 18.

Heat Exchanger. Selection of a heat exchanger involves economic and thermal design trade-offs. The use of a double-loop collection system carried with it two built-in penalities[5]. In a single loop system the collector fluid is drawn directly from the storage tank. In terms of heat transfer this could be considered an infinite heat exchanger, in that the fluid is cooled to the temperature of the tank. The existence of a heat exchanger in the system induces a loss in output because of the real (less than unity) effectiveness in the exchanger. Failure to draw all heat possible from the fluid causes the second penalty, a decrease in collector efficiency because of higher collector inlet temperatures[4]. For maximum heat exchanger effectiveness (assuming

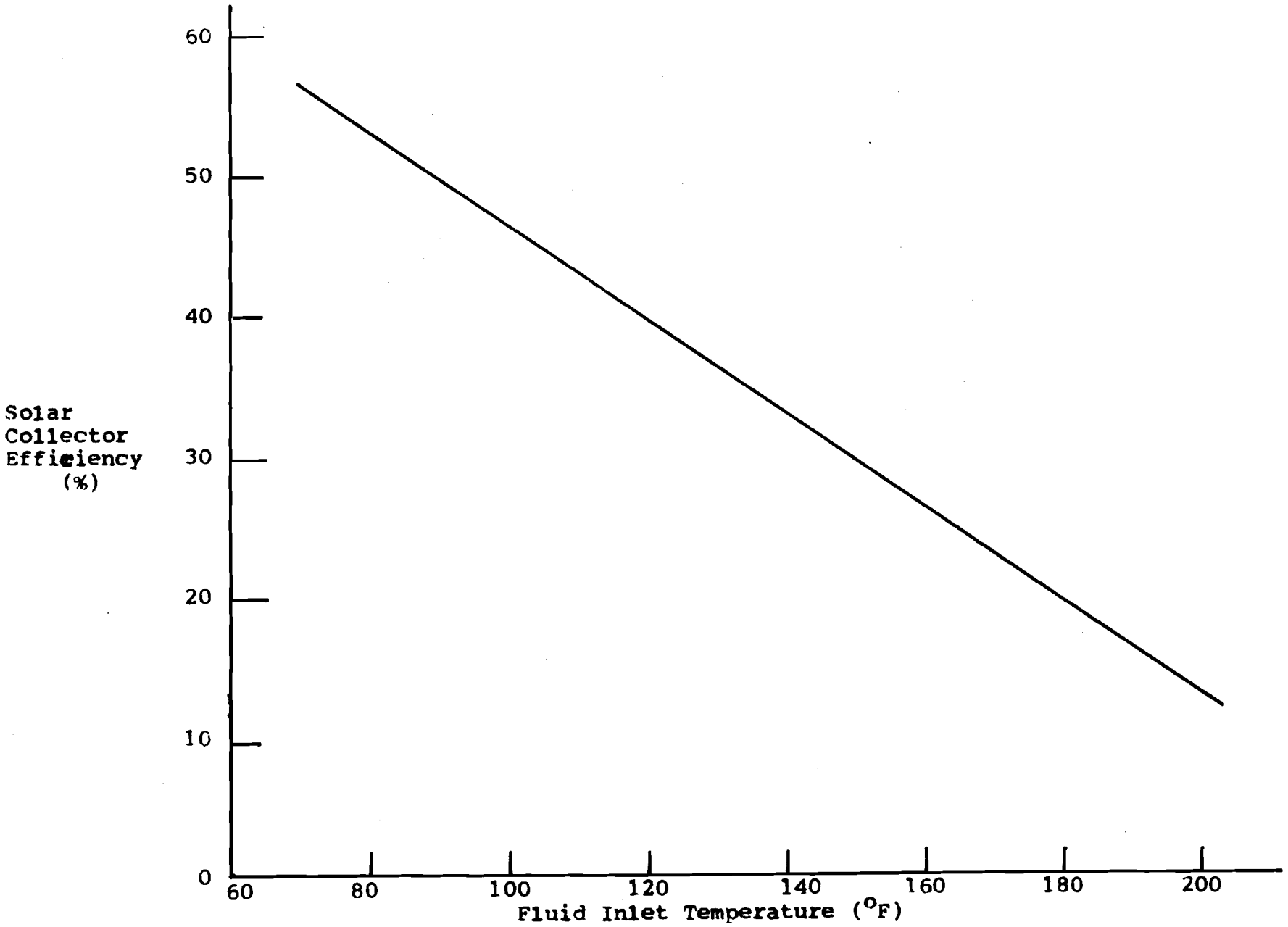

Figure 18 - Collector Performance vs. Fluid Inlet Temperature

approximately equal specific heats) the ratio of collector flow to tank-side flow should be a minimum. The selection process then became a matter of trading off pumping power and heat exchanger cost against flowrate capability and exchanger surface area. At flows above 25 gallons per minute pump costs accelerated rapidly and heat exchangers were approaching the industrial applications range and price level. Thus, a 25 gpm capacity (tubeside) heat exchanger was selected. Its predicted effectiveness was calculated to be 75%. The flowrate on the collector (shell side) is 3 gpm (.3 gpm per collector, as recommended by the manufacturer). For a tank temperature of 130°F and collector output temperature of 145°F the tank-side of the loop is expected to increase 1.8°F and the collector side decrease should be 11.25°F. Figure 19 shows a photograph of this heat exchanger.

Differential Thermostat. A differential thermostat is used to operate the collector flow loop. The unit operates on the output of two temperature sensors, one measuring the plate temperature of the solar collector, the other sensing storage tank temperature. The normal action of the thermostat turns the loop on when the collector fluid is 20° ± 3°F higher than the storage tank and turns it off when that difference drops to 3° ± 1°F. A detailed description of the working principles of the differential thermostat is contained in Reference 13.

Solar Collector Pumps. The estimated head losses in the solar collector and tank heater loops were 10 feet at 4 gpm and 42 feet at 25 gpm respectively. Centrifugal pumps of 1/8 hp and 1 hp were purchased for this application. As was the case with the baseboard convector

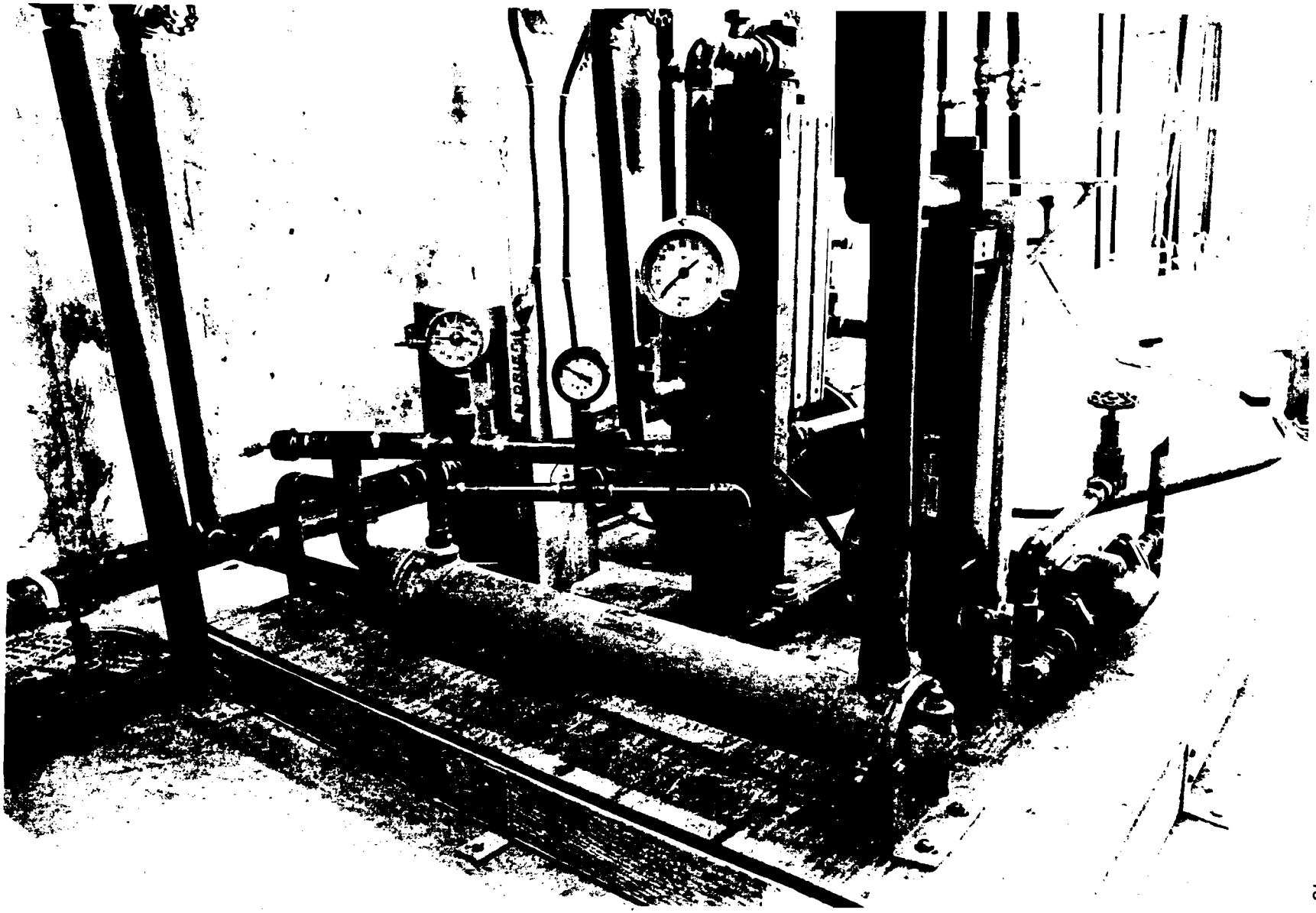

Figure 19 - Heat Exchanger

pumps, both of these pumps are equipped with bypass valves.

Source and Price Information

A detailed cost breakdown of all items used in the alternative energy heating system is included as Appendix B, a summary of the Bill of Materials.

CHAPTER IV

HEATING SYSTEM INSTALLATION

This chapter describes the sequence of installation of each subsystem handled by the 04 (Thermal Systems) group. During construction all the systems were dealt with simultaneously but for clarity they will be dealt with independently in this narrative.

Tank Treatment

The basement layout is as shown in Figure 4. The 2000 gallon tank (Tank C) was lined with a urethane waterproofing agent. This 1/16" urethane paste film was especially difficult to apply. Because of the danger of toxic fumes, all personnel working inside the tank were required to wear an oxygen breathing apparatus. The hoses leading in from outside the tank were cumbersome and the paste adhered to clothing and people much better than it did for clean concrete surfaces. The tank leaked slightly after the initial application, so an additional amount of paste was then applied along the seam between the walls and floor, eliminating the problem. The remaining tanks had been intended for similar treatment but the obstacles encountered in coating this first tank caused the 04 group to change methods. One 1000 gallon tank will now be waterproofed with water repellent and pool latex enamel paint. The walls and floor of the basement were poured in two separate operations and it is suspected that this caused leakage where the walls and floor come together. For this reason, the floor-wall seam will be coated with the urethane

water proofing agent. This will be a considerably simpler procedure than pasting the entire tank. It is planned to operate the tanks without insulation and then to insulate them and compare the economic tradeoff between first-cost increase (insulation expense) and the long term efficiency losses of unprotected tanks.

The tank covers described in Chapter III are under construction. The one on the 2000 gal. (Tank C) is complete and a cover for tank E is being built at this time.

Solar Collector System

Schematics of the two loops used for solar collection are included in Figures 20 and 21. Piping diagrams of the portion of each loop contained in the basement of Solar Habitat One are shown in Figures 22 and 23. A photograph of the completed assembly is contained in Figure 24.

The manifold piping necessary to operate the collectors with each storage tank was installed first. This 1 1/4 in. nominal copper tubing was anchored to the floor by driving 1/2 in. dowels into drilled holes in the concrete and fastening sheet metal straps around the tubing and to the dowels using wood screws. Military surplus valves obtained free by the University were used in this loop. In retrospect this was unwise, as the cost of manufacture of bushings needed to adapt the valves was almost as high as the cost of a set of valves designed for our purposes. If labor is included in this analysis the surplus valves cost more. The solar collector loop platform was then constructed and its equipment fixed in place as shown in Figure 25.

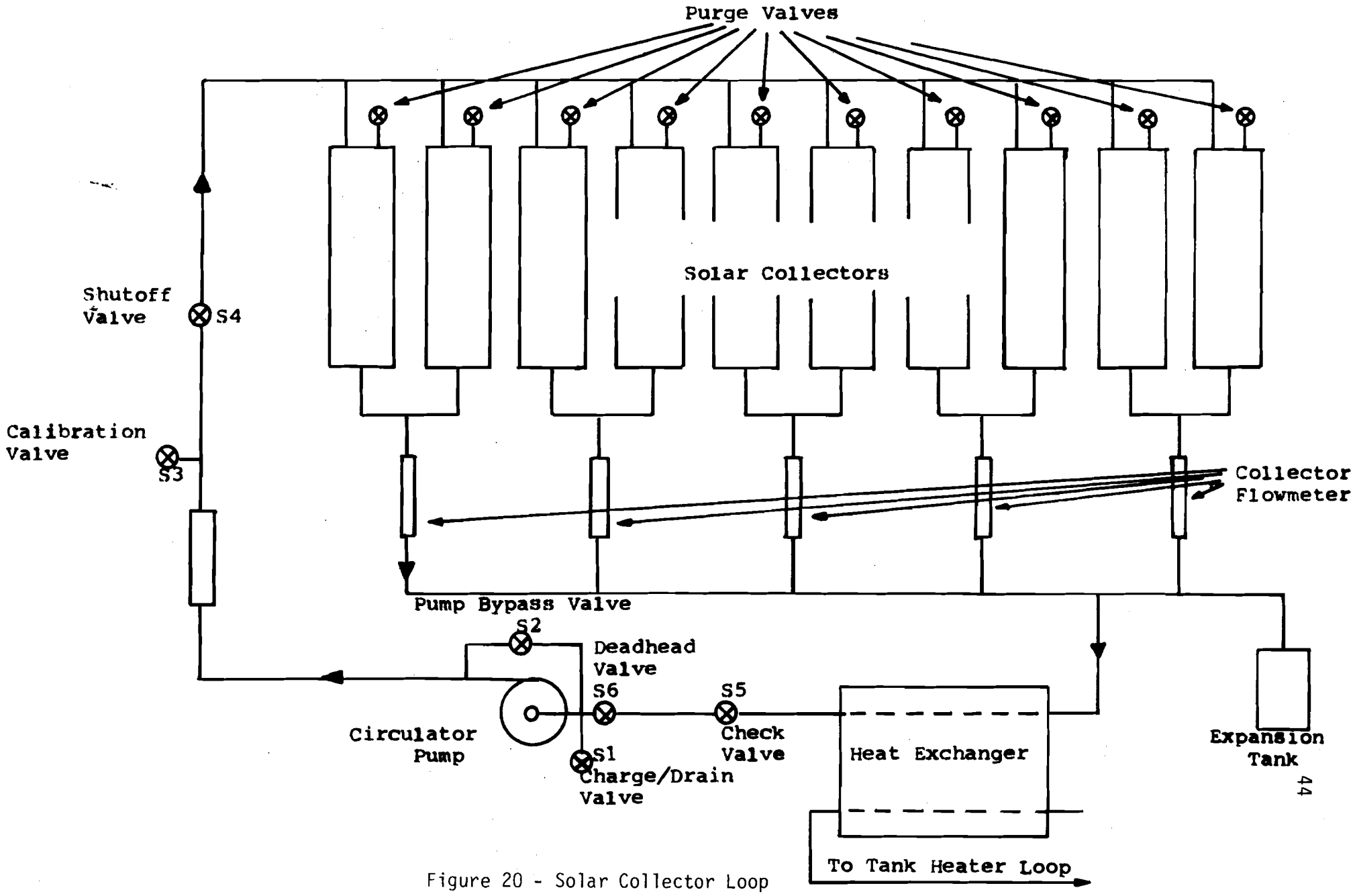

Figure 20 - Solar Collector Loop

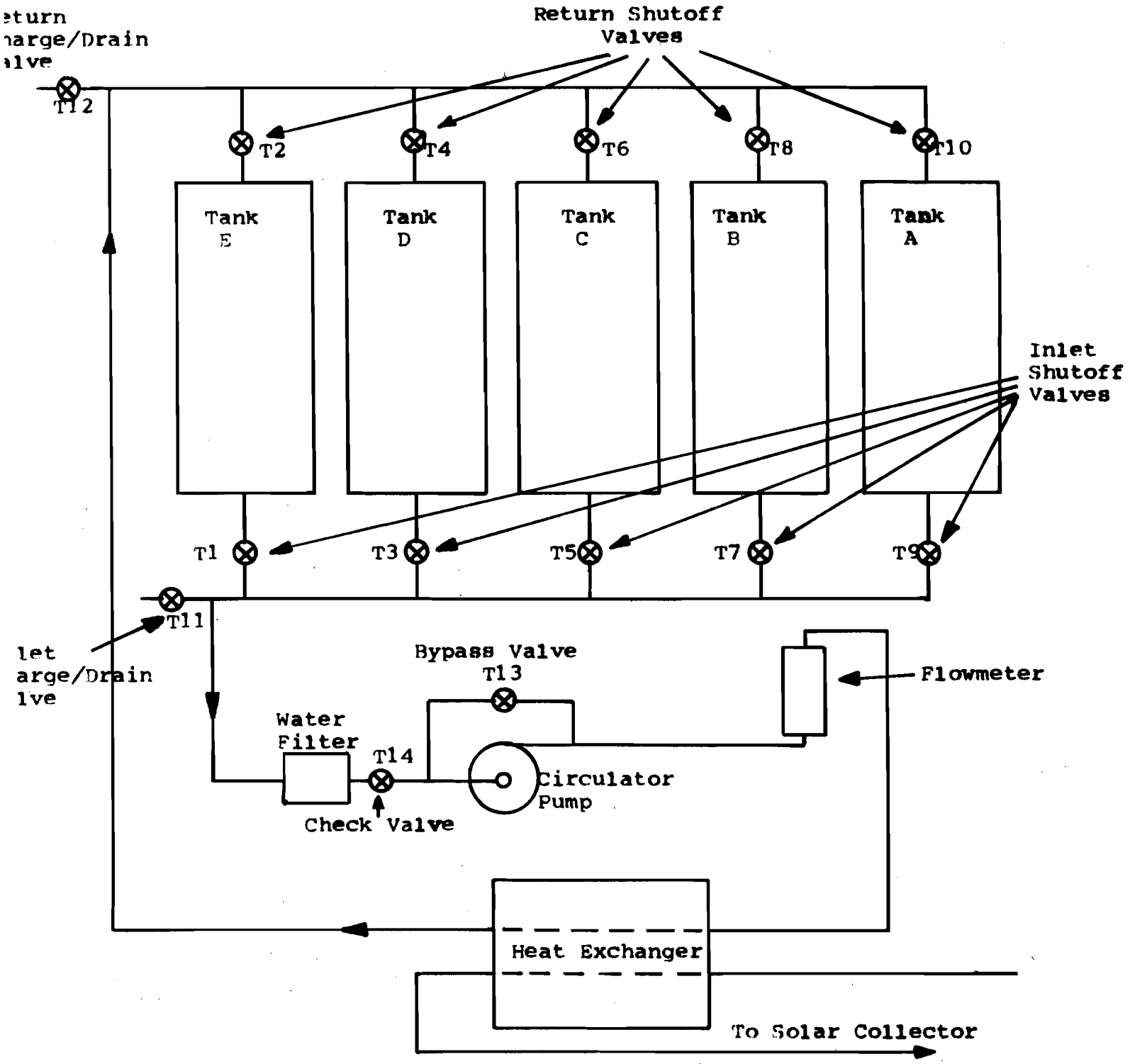

Figure 21 - Tank Heater Loop

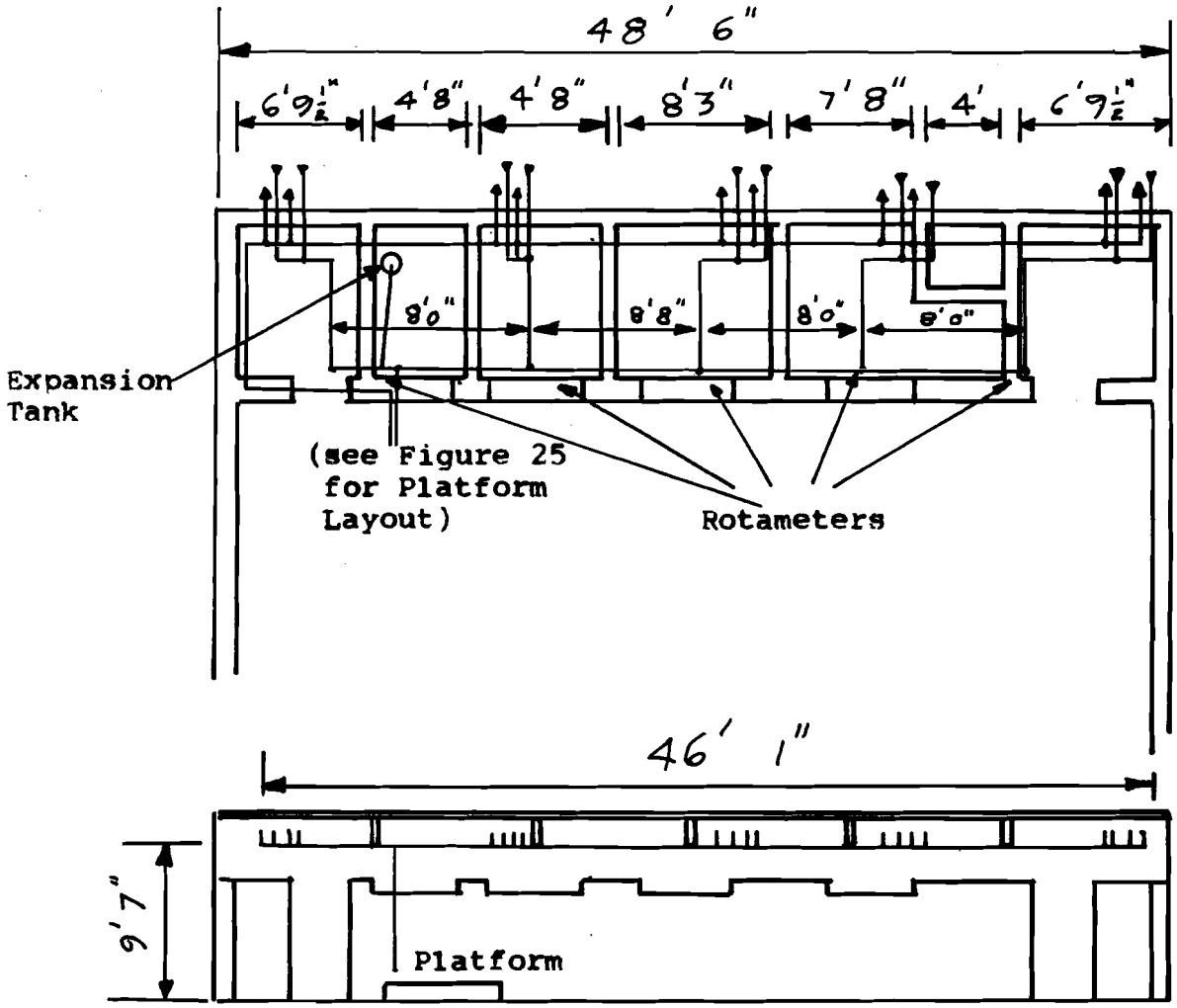

Exterior Walls 10" thick
Interior Walls 8" thick

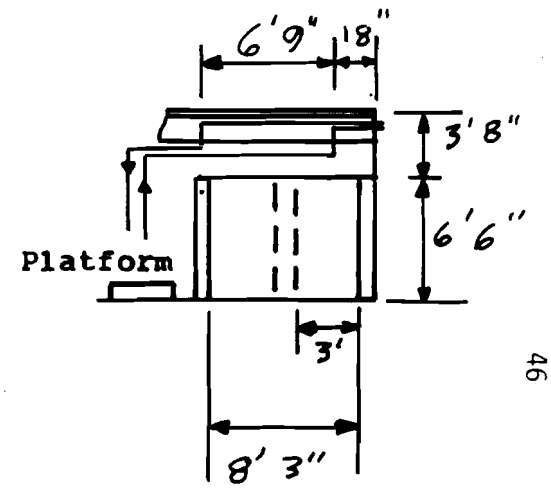

Figure 22 - Piping Diagram Solar Collector Loop

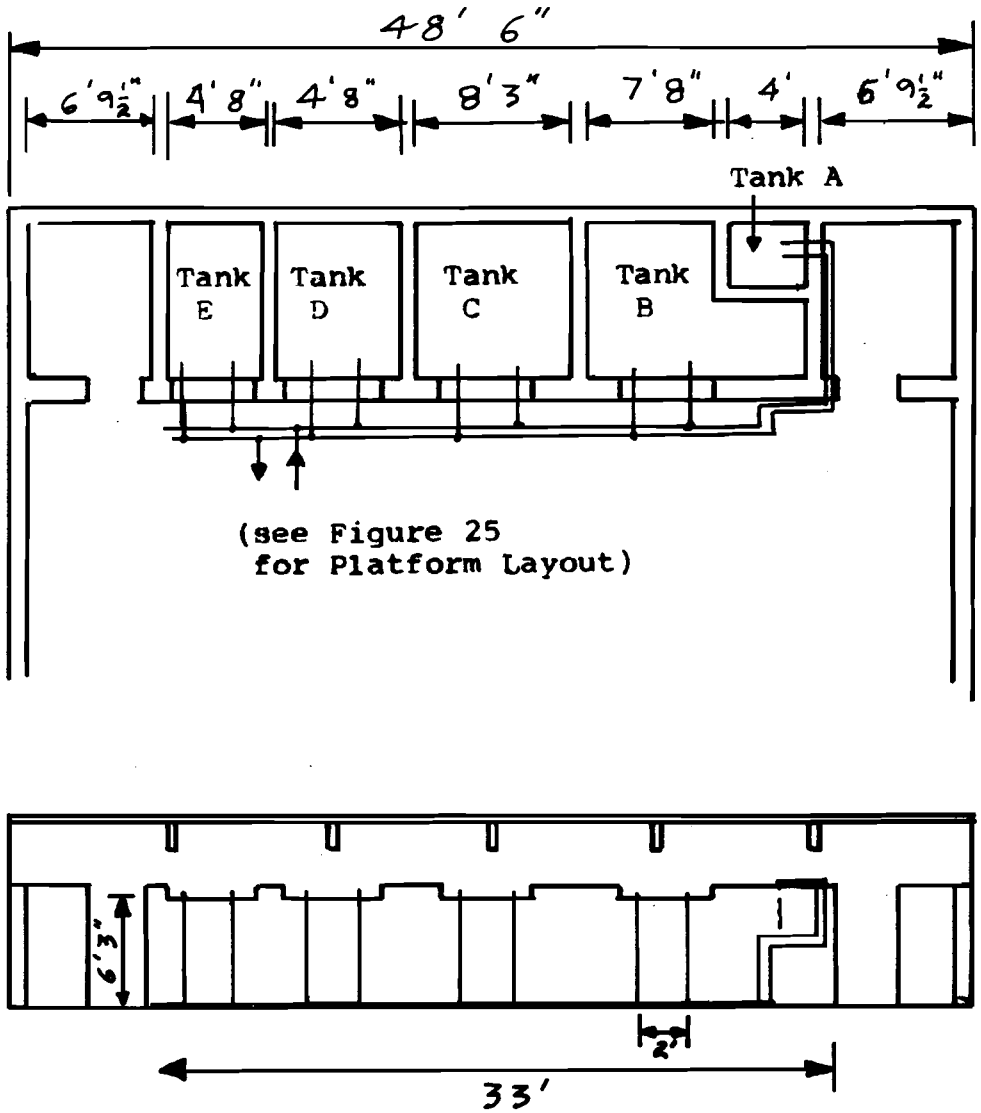

Exterior Walls 10" thick
Interior Walls 8" thick

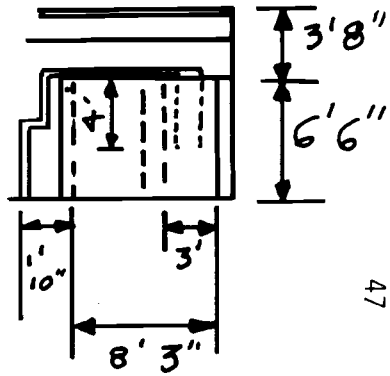

Figure 23 - Piping Diagram Tank Heater Loop

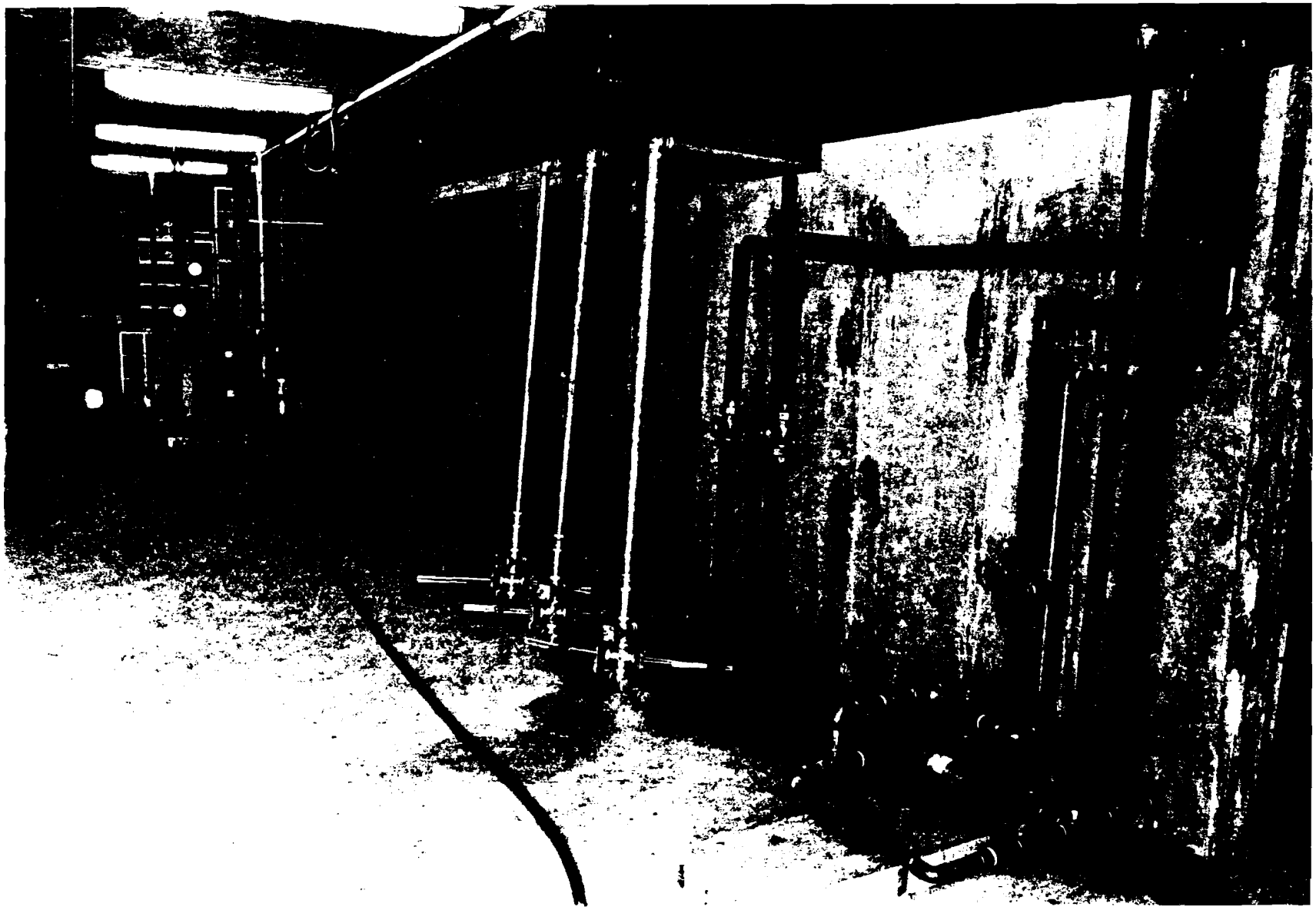

Figure 24 - Manifold Arrangement

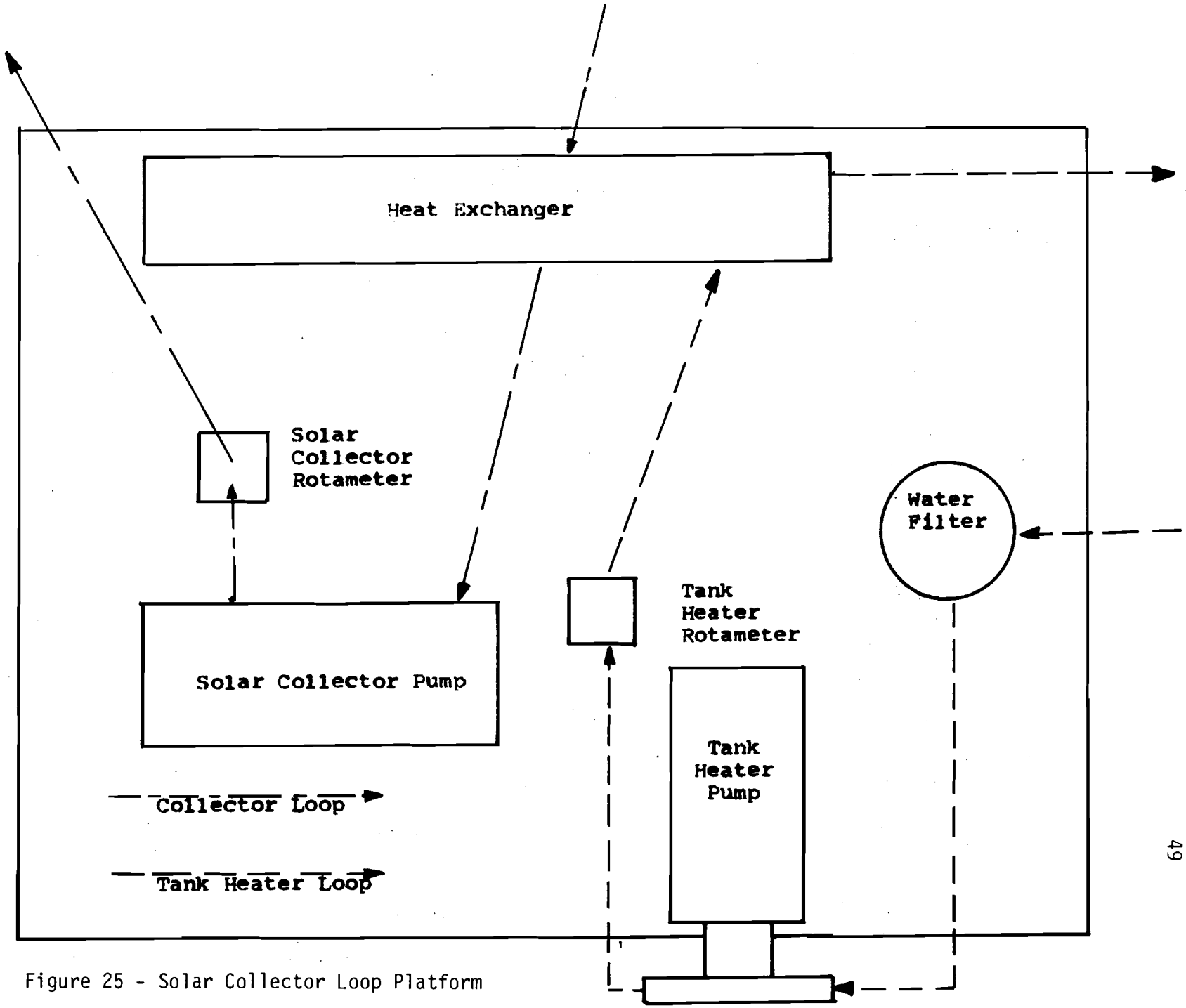

Figure 25 - Solar Collector Loop Platform

The solar collectors were mounted vertically on Solar Habitat One's south wall. Each pair of collectors is connected to a separate rotameter to assure more accurate flow distribution. The house had been prefabricated before consolidation of both projects had been completed and the only choices available for mounting the collectors were on the roof, which has a pitch of 8 degrees, or on the south wall. Framing to hold the collectors on the roof at a better angle would have to be sturdy enough to stand winter storms, and so would be large and unsightly. As the predominant use of collection would be in the winter the collectors were set on the south wall where the losses due to poor operating angle would be less. The windows of Solar Habitat One do not open and inclusion of an angled staging on the south wall would block the view from all windows on the south wall. Several of the windows would already be partially blocked by vertically mounted collectors. In short, some efficiency was sacreficed in favor of reduction in initial cost and building appearance improvement.

Two instrument risers were made up to monitor tank conditions for instrumentation and control purposes. The three-sensor riser is intended for use in all single-tank collection systems. When two tanks are used, as in Model 3B, the three sensor riser is used in the collector tank and the two sensor riser is used in the windmill tank. Sketches of these risers are contained in Figure 26. The thermistor probe provides tank temperature data to the central control system. The thermocouple is connected to a recorder which collects

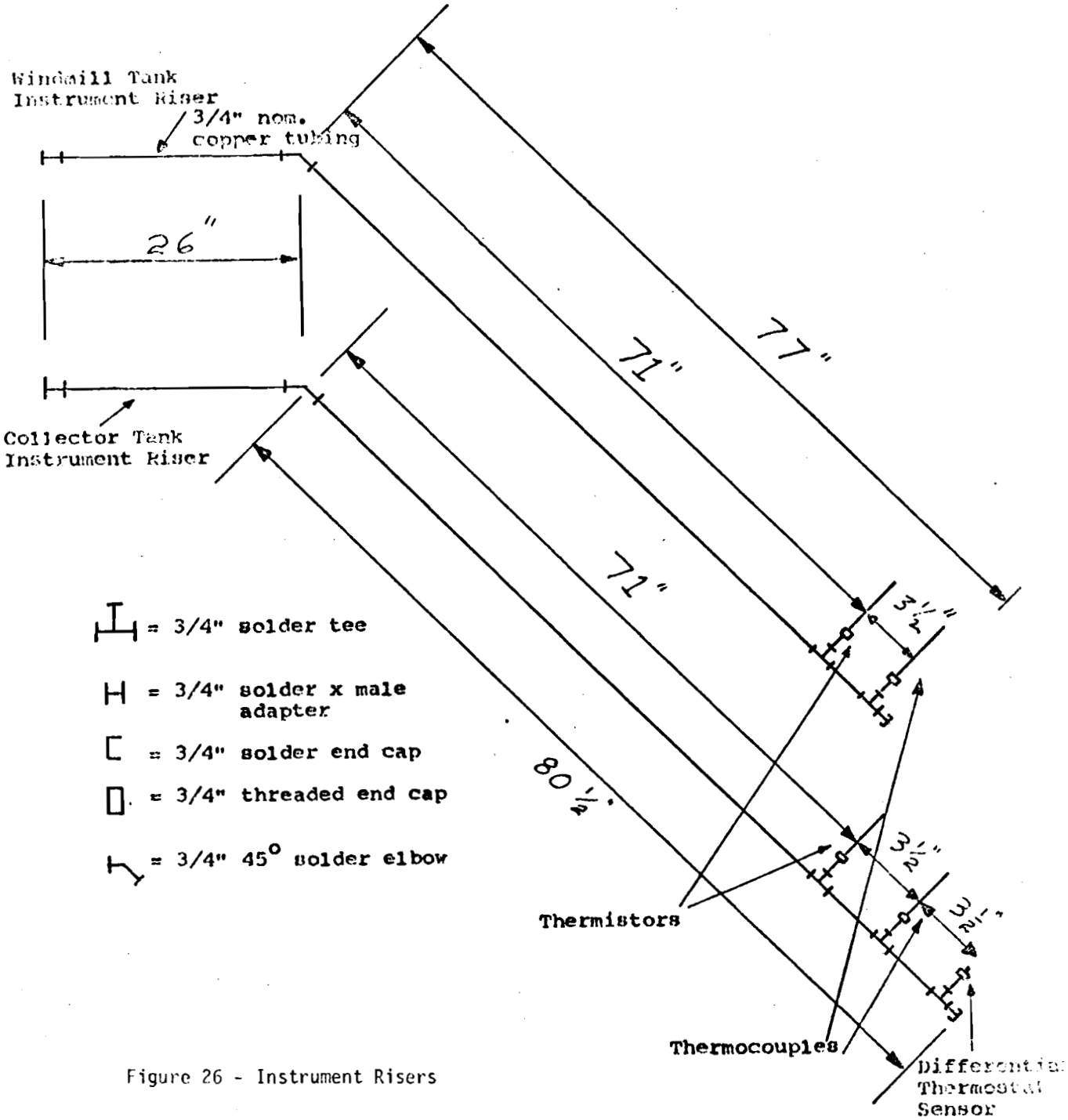

Figure 26 - Instrument Risers

data on system operation during experimentation. The Differential Thermostat probe operates as part of the solar collector system.

Float Valve System

The float valve circuit, Figure 27, draws water from the domestic cold water supply to keep the operating water tanks at their required level, making up for evaporative losses. A shutoff valve is installed above each float valve to close out the float valves in empty tanks.

All piping in this loop is 3/4" nominal copper tubing.

Water Baseborad Convectors

The water baseboard convector loops have a manifold system to permit connection of these heaters to any tank as does the tank heater loop. There are three separate loops of convectors, each with its own circulator pump. The basement, with 16 linear feet of double convector, comprises one loop, the main floor living room has 16 feet of double convectors and makes up the second loop. The remainder of the main floor (18 feet of double convectors) is the third loop.

The manifold pipes bringing water to and from the three loops are 1 1/4" nominal copper tubing. The copper tubing in the three convector loops is 3/4" nominal.

Schematics and piping diagrams of the baseboard loops are contained in Figures 28 and 29.

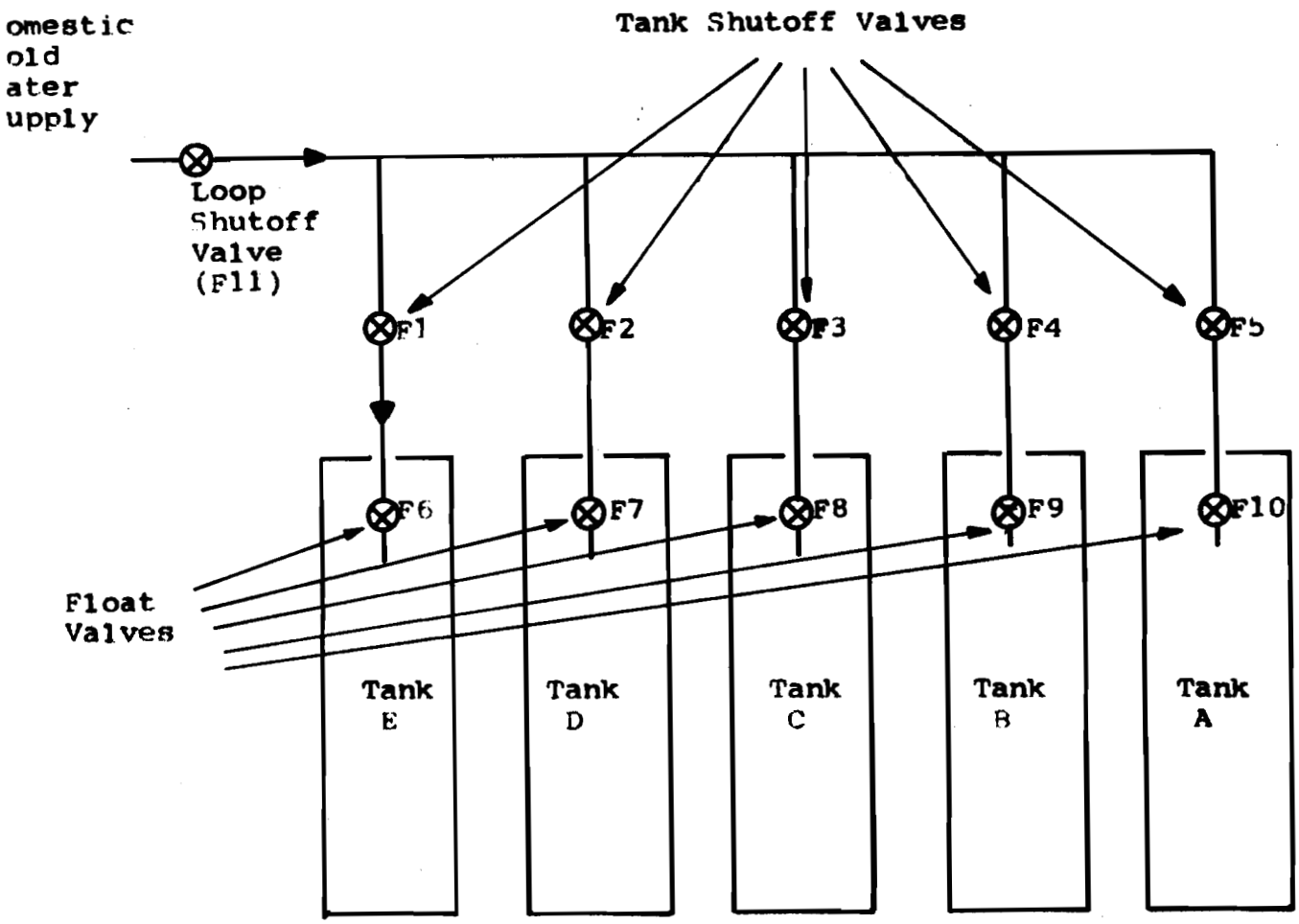

Figure 27 - Float Valve Circuit

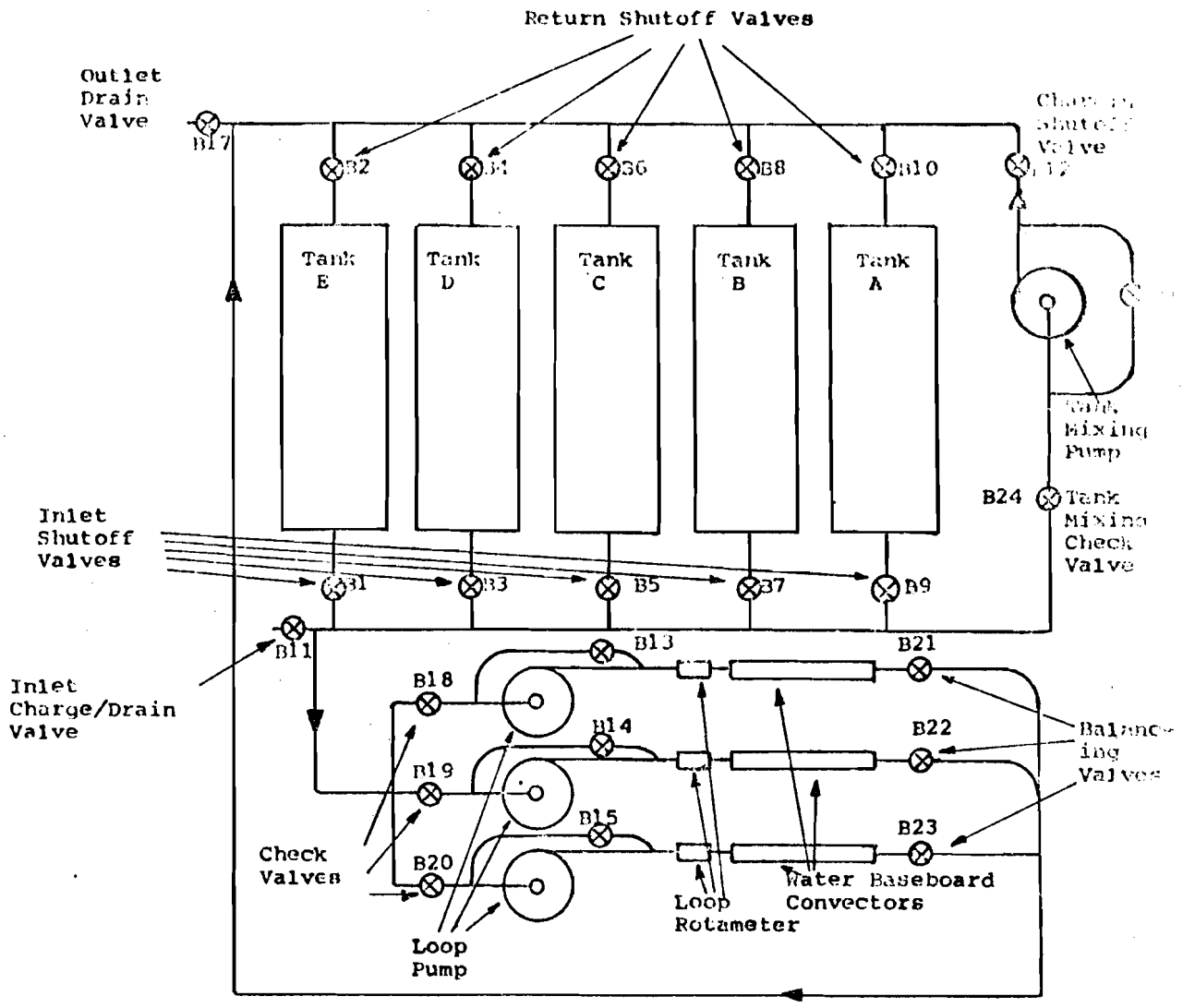

Figure 28 - Water Baseboard Convector Loops

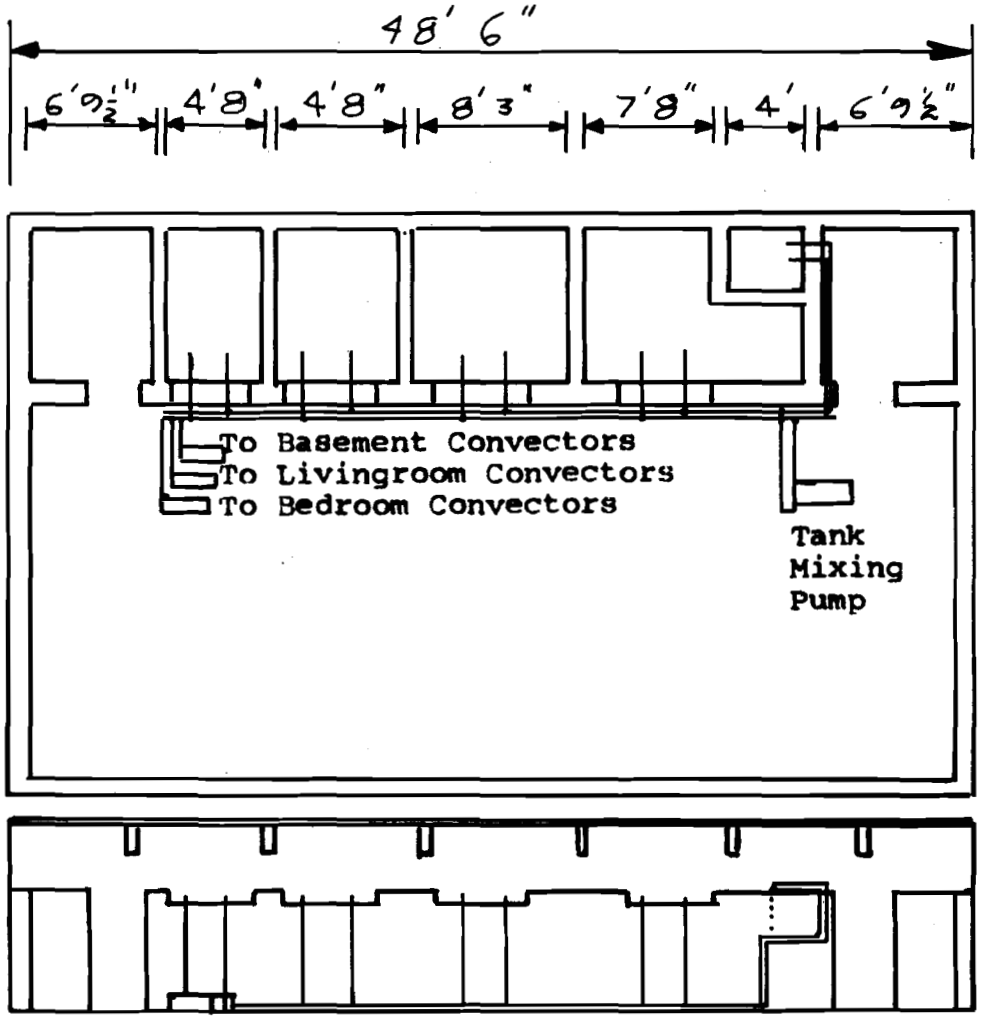

Exterior Walls 10" thick
Interior Walls 8" thick

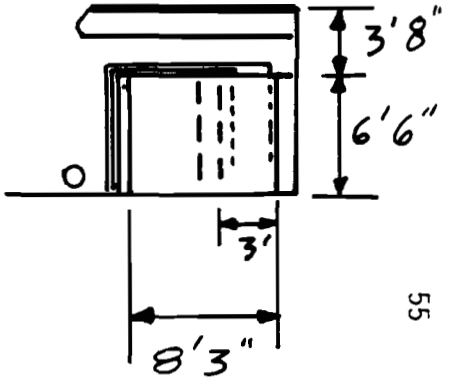

Figure 29 - Baseboard Loop Piping Diagram

The tank mixing loop uses the same manifold as the water baseboard loop. Later designs provide for solenoid valves to be used in conjunction with the manual valves now used to open and close tank risers. When operating a two-tank system (solar collector output to one storage tank, WTG output to the other) and one tank reaches the maximum temperature allowed (194°F) both sets of solenoid valves will open. The mixing pump will draw water from the hot tank and return mixed water to the colder tank. It would have been more preferable to draw water from one tank and return it to the other, but this would cause a change in water volume unless accompanied by some means of return flow (either a siphon or pump). The difference in tank water level makes a siphon impractical and an additional pump, new manifolds and ten more solenoid valves were considered too expensive. The manual valves would be employed in this system as balancing valves, and would be partially closed as required to balance the flow resistance in each fluid path, preventing maldistribution of flow. If, for example, a tank close to the mixing pump needs to be mixed with one at the other end of the basement, the closer tank's manual valves would have to be partially closed to equal the flow resistance in the lines leading to the other tank. In this way an equal amount of water will be drawn from and returned to each tank. When the solenoid system is added, a means of measuring and controlling the flowrate in each riser will be necessary.

CHAPTER V

OPERATION INSTRUCTIONS

This chapter details checkout and calibration procedures for each fluid loop in the alternative heating system of Solar Habitat One.

Solar Collector Loop

To calibrate the solar collector loop rotameter (see Figure 20) a hose is run from the domestic cold water supply through a calibrated reference flowmeter and into the collector loop charge/drain valve (S1). A second hose is run from the calibration valve (S3) to the basement drain. The dead head and shutoff valves (S5 and S4) are closed, the pump bypass valve and calibration valve (S2 and S3) are left open. The cold water supply is turned on and water flows through the reference and the loop rotameter in series, and the required comparison is carried out.

To check the loop for leaks the following procedure is used:

(1) Valve positions: Purge valves, calibration valve, dead head valve, pump bypass valve and charge/drain valve are closed; Shutoff valve open.

(2) Connect domestic cold water supply to the charge/drain valve and open it.

(3) Turn on circulator pump (partially open bypass valve to ease load on the pump).

(4) Open one purge valve, then close it when water begins to

seep out. Repeat this procedure until the air is removed from all collectors. When the loop is fully charged with water, run the pump with the charge/drain valve open and the dead head valve closed. This will put the loop under 21 pounds of pressure. Inspect for leaks.

To calibrate the five collector rotameters, the loop must be charged with fluid and closed. Turn on the circulator and adjust the pump bypass valve for .6 gpm loop flowrate. Close all collector rotameters but the one being calibrated and adjust the bypass valve for flows ranging from .1 to .6 gpm, comparing the reading of the collector rotameter to that of the loop rotameter. To calibrate pressure gauges a similar procedure is used. Again street main water pressure is connected to the charge/drain valve and a known reference pressure gauge is included in the connection line. Open the charge/drain valve, shutoff valve and dead head valve. This will place the entire loop and the reference gauge at street main pressure. There are no provisions for calibrating the thermometers in the various loops other than draining the loop and removing them.

Approximately 21 gallons of antifreeze solution is required to fill the collector loop. To charge the loop, the fluid is placed in a large portable tank and a hose is run from this tank to the charge/drain valve. The dead head valve, rotameter calibration valve and all purge valves are closed. The shutoff valve and pump bypass valve are full open. The circulator is started and the bypass valve is partially closed to start a slow flow (about 1/2 gpm). Air purging is carried out as described above.

Tank Heater Loop

To calibrate the tank heater loop rotameter, a reference flowmeter is connected between the domestic cold water supply and the inlet charge/drain (T11) valve. All shutoff valves but one return shutoff valve, are closed. Water then flows through the reference rotameter and the rotameter in series permitting comparison of the two meters. To check this loop for leaks and to calibrate pressure gauges, close all tank inlet and outlet valves and feed the domestic cold water supply (with a pressure gauge on the connecting line) to the tank heater loop charge/drain valve. To charge the tank heater loop, domestic cold water is fed to the inlet charge/drain valve with all shutoff valves closed except the inlet and return shutoffs to the tank being used. With the domestic water line open, turn on the circulator, gradually closing the bypass valve for full flow. When more than 15 gpm is flowing through the pump, it is clear of air locks. Close the inlet charge/drain valve and the loop is operational.

Collector System Operation

The collector loop and tank heater loop operate simultaneously. The pump driving each system is controlled by the differential thermostat which is independent of the central control system. When the sensor beneath collector #5 and the collector instrument riser are in position, switching the thermostat to automatic will cause it to operate as described in Chapter III. Switching the thermostat to

manual will set the collector system into operation regardless of tank or collector fluid temperatures.

Water Baseboard Convector Loops

To calibrate a loop rotameter, close all inlet shutoff valves, the outlet drain valve and the charging shutoff valve. Connect a known reference flowmeter betwwen the domestic cold water supply and the inlet charge/drain valve (B11). Close all balancing valves except the one on the loop to be calibrated. Open one return shutoff and run water through the loop to be calibrated. Repeat this sequence for each other rotameter.

To charge the loops a similar procedure is used. Feed domestic cold water to the inlet charge/drain valve with all shutoff valves closed. Open the inlet charge/drain valve to the tank being used and turn on the domestic cold water line. This will clear any air out of the riser. Close the inlet shutoff valve and open the return valve. This will drive the air out of each pump. Close the inlet charge/drain valve, open the inlet shutoff valve to the tank in use and turn on the pumps. Once flow begins, the loop will clear of air in about 15 minutes.

Float Valve Circuit

To charge this loop, open the loop shutoff valve and close all tank shutoff valves but the tank to be used. The line will clear itself of air and the ballcock valve will maintain the water level as required.

To calibrate the float valve requires a two step procedure. First calibrate the water meter leading from the street main to the house and the meter immediately downstream of it. The only valves between these meters are the two outside faucets and the float valve circuit. Ensure that the basement shutoff valves to the faucets are closed and tagged. After calibration of the water meters, fill the tank whose float valve is to be calibrated and let the ballcock valve shut the flow off automatically. Then measure the difference in water passed through the two calibrated water meters.

CHAPTER VI

FUTURE MODIFICATIONS AND RECOMMENDATIONS

As construction of the Habitat neared completion it became apparent to members of the Thermal Systems group that some portions of the alternative heating system design needed modification.

Financial constraints caused the postponement of several system options for alternative heating of Solar Habitat One. The first portion of this chapter discusses the tentative design of these system modifications. The second part of this chapter deals with recommendations for remedial action on these design points.

Modifications

Domestic Hot Water Preheater. (Figure 30) Without an air conditioning capability the New England Wind Furnace (NEWF) power output is wasted during summer months. One means of using some of this surplus capability is to provide a preheating of domestic hot water service. Most of the tubing, insulation and fasteners were obtained for this loop, but purchase of the heater coil was deferred. The present plan is to feed the domestic hot water heater with 3/4 in. copper tubing leading from the cold water supply through the heater coil and into the water heater.

Drawing water directly from the heated tank was not attempted because it would have required an additional pump and would have caused problems in mixing. If the water tank was heated to a tempera-

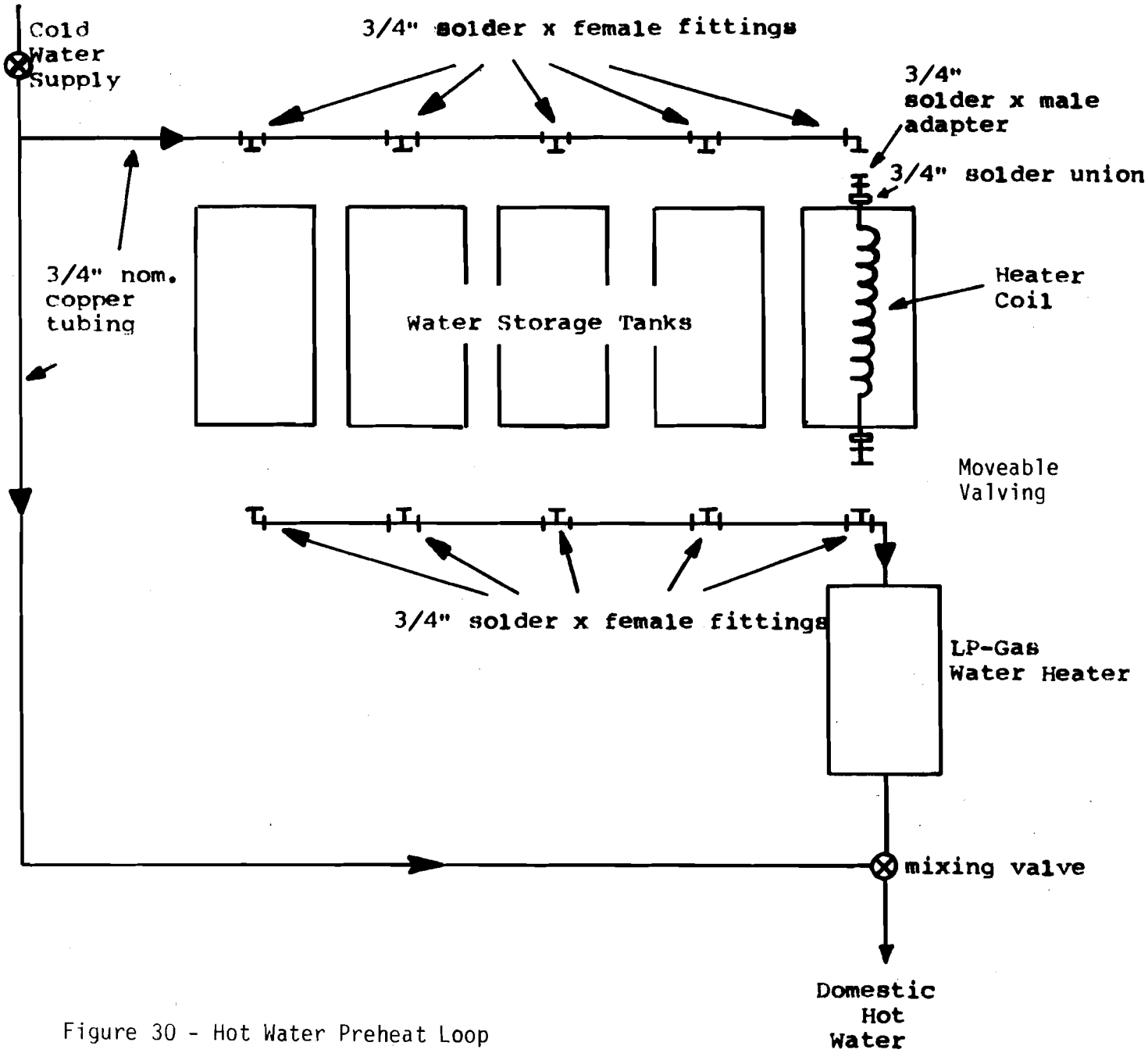

Figure 30 - Hot Water Preheat Loop

ture higher than 140°F the mixing valve would go into operation. Commercially available mixing valves are generally designed to operate with both fluid streams at the same pressure. As the system is now planned this criterion is met but if a separate pump were in use as is necessary to draw hot water from the storage, a pressure mismatch would occur. Setting the pump to street main pressure would not solve the problem, as street main pressure varies during the day with demand. A solenoid operated bypass valve controlled by a pressure sensor would keep the two pressures equal; it would also cost more than the combined total of the rest of the hot water preheat loop.

Two Tank Solenoid System. To implement model 3-B (Figure 13) now would require manual control. To achieve the objective of model 3-B, i.e. improved collector efficiency, automatic control is essential. To allow the mixing process described in Chapter IV to take place, thus increasing the storage potential of the two-tank system, automatic control is again necessary.

The drawback in installation of solenoid valves was solely economic. With five tanks, each with two risers, ten solenoid valves would be needed to run model 3-B over a wide range of storage sizes. Reviews of several manufacturers' product lines showed that most solenoid valves for water applications have maximum design temperatures of 180°F, 14°F below NEWF maximum storage operating temperatures. Discussions with these manufacturers revealed that solenoid valves suitable for the NEWF system would cost more than $100 each. In terms of the project's first year finances this cost was prohibitive.

Heat Waster. One of the objectives of the New England Wind Furnace Project was to demonstrate the capability of a wind turbine generator of given height and blade diameter to heat a home. Papers and articles based largely on computer program results have geen generated by NEWF project personnel to justify continued efforts in this field. It would be a definite asset to the project to be able to demonstrate that a NEWF machine is capable of developing some certain output as opposed to suggesting it can because of mathematical modeling results. This was the justification behind the heat waster system. The concept was to operate the windmill at all times and instead of eliminating its output when not needed, the excess power would be dissipated through a heat exchanger to the environment. An economical means of setting up such a heat exchanger was not found and so the heat waster was temporarily set aside.

Recommendations

The suggestions mentioned here are intended to simplify and "clean up" the design of the alternative heating systems of Solar Habitat One, reduce the cost of these systems, or to improve performance.

Tank Manifold Systems. 1 1/4 in. copper manifolds are presently used to draw water from storage tanks to the water baseboard and tank heater loops. These manifolds are anchored to the basement floor and draw water from the tanks by means of 6 ft. high riser pipes. Inexpensive brackets could be constructed which would be attached to the

4 ft. x 4 in. slot atop each tank. The brackets could be used to hold the manifolds four feet above the floor as shown in Figure 31. This would eliminate the need for 80 ft. of 1 1/4 in. copper tubing and its insulation. It would provide better access to the manifolds for repairs on solder joints and draining. With judicious cutting of the existing risers, a minimal amount of additional stock would be required to modify the present installation. The manifolds, as tentatively designed could be stacked adjacent to each other instead of having a gap between the pairs caused by the drain manholes. Assuming the basement is kept at a reasonable temperature (about 70°F) during the winter, the heat loss through the insulation will be less than if it were fastened to the 45°F concrete floor.

Apart from the functional advantages of getting the manifolds off the floor, there would be a selling point in not having such an intimidating array of standpipes confronting prospective solar home owners.

Tank Heater Bypass. At present the solar collection system is independent of all others. It is suggested that there be a two way solenoid valve installed between the outlet of the heat exchanger (tank heater side) and the water baseboard inlet manifold. In this way heated water could be passed from the storage tank directly to the living area when needed. This would in effect simulate systems which take advantage of tank stratification. The higher temperature water circulated through the baseboard convectors would cut down on the pumping power required to heat the house by decreasing the amount

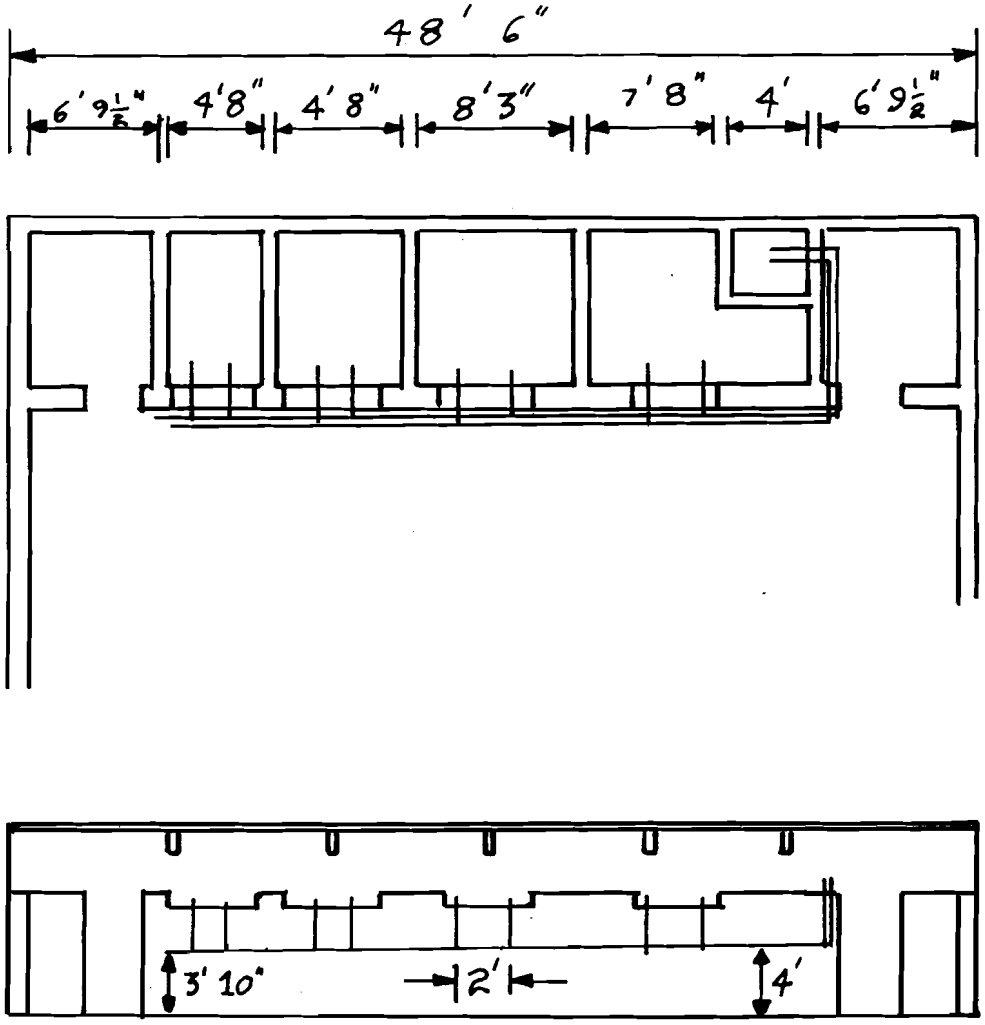

Exterior Walls 10" thick
Interior Walls 8" thick

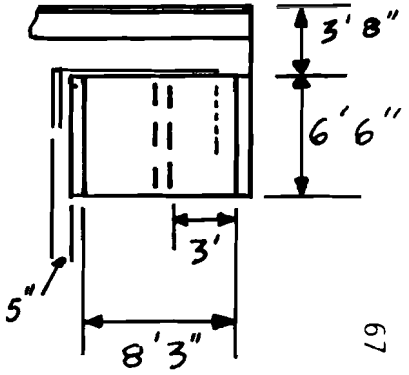

Figure 31 - Manifold Suspension System

of time the pumps must be operating.

Auxiliary Heating System. The LP-Gas auxiliary system was originally designed to operate with a 3 ft. crawl space under the main floor serving as a plenum chamber. The addition of the basement has somewhat complicated the flow analysis. Preliminary calculations show that an 84°F basement temperature is needed to keep the main floor at 70°F. This gradient is necessary to provide a convection current strong enough to force air up through the perimeter slots between the basement and main floor. In the original system the pressure induced in the plenum chamber by the furnace fan produced the necessary air flow.

If maldistribution becomes apparent, ducting is the most obvious and cheapest short-term solution. The presence of water baseboard convectors, however, suggests a better alternative. Integration of both heating methods (alternative and auxiliary) into one delivery system would make for a much cleaner design. Also, this would save the cost of a second delivery system in any economic analysis of the various heating combinations available in Solar Habitat One. It is reiterated here that the double-tiered water baseboard convectors were installed to compensate for low line temperatures. At normal heating ranges (160-200°F) such as the LP-Gas auxiliary water heater would provide these are heavy duty units (see Table 1).

BIBLIOGRAPHY

1. Heronemus, W.E., 1975, "Investigation of the Feasibility of Using Windpower for Space Heating in Colder Climates," Third Quarterly Report, New England Wind Furnace Project (Appendix VI).

2. Heronemus, W.E., 1974, "Development of the New England Wind Furnace," Research proposal submitted to the National Science Foundation.

3. McGowan, J.G., Heronemus, W.E., and Darkazalli, G., 1975, "Wind and Solar Combinations for Space Heating," 10th Intersociety Energy Conversion Engineering Conference, Delaware.

4. Duffie and Beckman, SOLAR ENERGY THERMAL PROCESSES, J.L. Wiley and Sons Publishers, N.Y., N.Y., 1974.

5. DeWinter, F., 1975, "Heat Exchanger Penalties in Double-loop Solar Water Heating Systems," SOLAR ENERGY, Vol. 17, pp. 335-337.

6. Heronemus, W.E., 1975, "Investigation of the Feasibility of Using Windpower for Space Heating in Colder Climates," Second Quarterly Report, New England Wind Furnace Project (Appendix VI).

7. Cromack, D.E., 1976, "The UMass Solar Habitat and the New England Wind Furnace," Paper presented at the New England Conference on Energy in Agriculture, May 3-4, 1976, University of New Hampshire, Durham, New Hampshire.

8. Heronemus, W.E., 1975, "Investigation of the Feasibility of Using Windpower for Space Heating in Colder Climates," Fourth Quarterly Report, New England Wind Furnace Project (Appendix VII).

9. McAdams, W.H., HEAT TRANSMISSION, 3rd Edition, McGraw-Hill Book Co., N.Y., N.Y., 1954.

10. Darkazalli, G., "Solar and Wind Home Heating and Domestic Hot Water System: An Energy and Economics Study," Ph.D. Thesis ME, University of Massachusetts, Amherst, MA 01002, Fall 1976.

11. Sabersky, Acosta and Hauptmann, FLUID FLOW - A FIRST COURSE IN FLUID MECHANICS, 2nd Edition, McMillan Co., N.Y., N.Y., 1971.

12. Kreith, F., PRINCIPLES OF HEAT TRANSFER, 3rd Edition, Intext Educational Publishers, N.Y., N.Y., 1973.

13. Schlesinger, R.J., 1976, "Operating Cycle for a Typical Solar Heating System," SOLAR ENGINEERING, February/March 1976, pp. 26-28.

14. Heronemus, W.E., 1975, "Switching Logic UMass. Wind Furnace Experiment," University of Massachusetts, Report SH-I-07.01.001 TR/75/2, October 1975.

A P P E N D I X A

SWITCHING LOGIC

WIND FURNACE EXPERIMENT

(Revision of Reference 14)

SWITCHING LOGIC, WIND FURNACE EXPERIMENT REVISION 2., 9-75

SWITCHING LOGIC, Model 1-A: Figure 32

1. Assume WIND TURBINE GENERATOR has WINDPOWER to deliver. If TH-1 $\leq$ 68°F, LOAD SWITCH connects WINDPOWER to BASEBOARD ELECTRIC, stepping through its increments of increasing load resistance as commanded by the PRIMARY CONTROL SIGNAL.
2. If TH-1 > 72°F, LOAD SWITCH disconnects BASEBOARD ELECTRIC from WIND-POWER, LOGIC closes SW-1 sending the command BLADE FEATHER and ZERO FIELD to WIND TURBINE GENERATOR.
3. If TH-A < 65°F, TH-A will activate either the L.P. Gas Auxiliary Furnace or the Wood Burning Auxiliary Furnace to supply heating to HOUSE. The selection between the auxiliary furnaces will be made by manual switching between the two furnaces. When TH-A rises to above 68°F, furnace will shut down.
4. The WINTER-SUMMER MANUAL SWITCH (SW-W/S) will permit isolation of BASEBOARD ELECTRIC from LOAD SWITCH and continuous BLADE FEATHER and ZERO FIELD for periods when heating is not desired in the house.

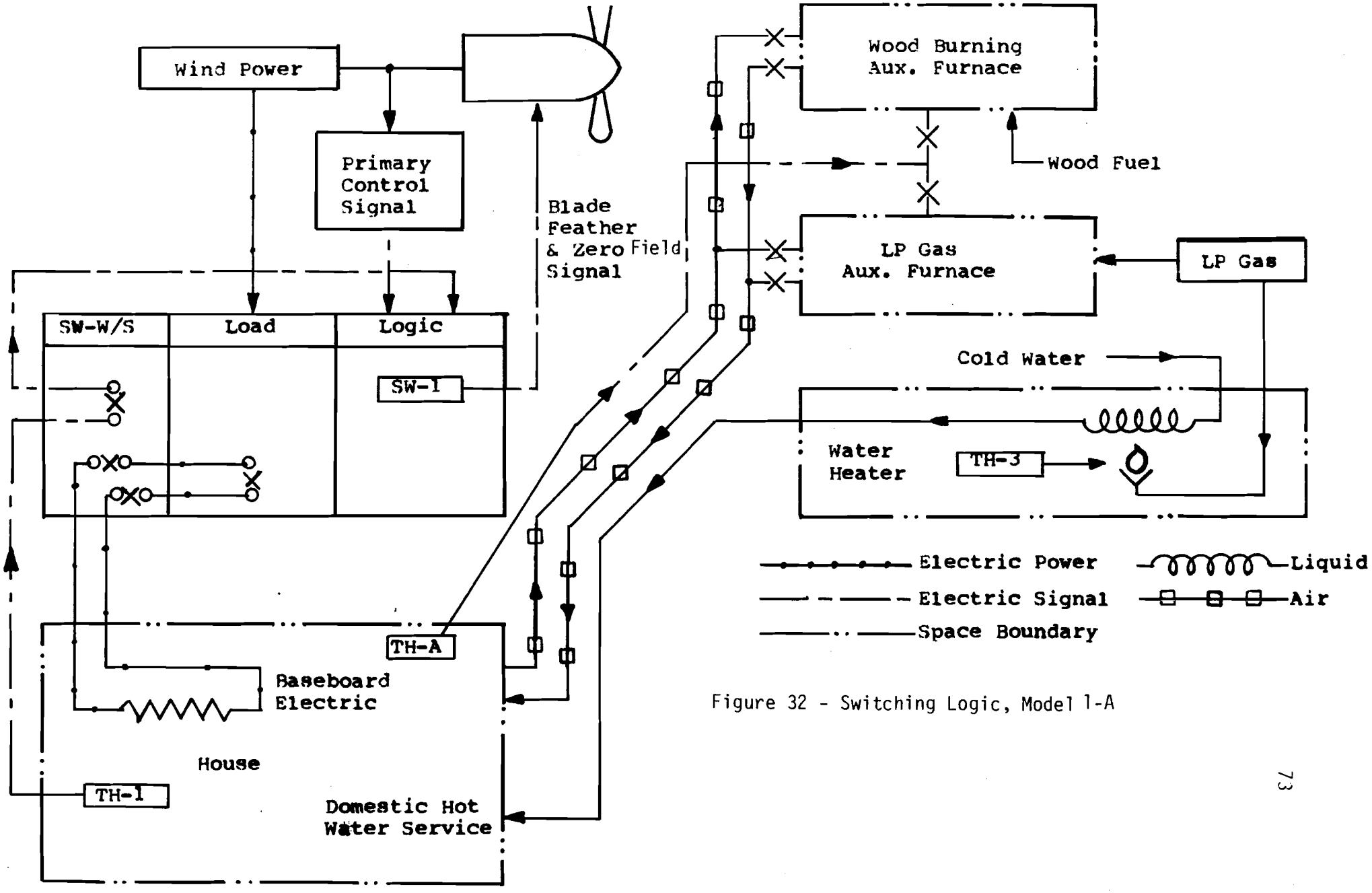

Figure 32 - Switching Logic, Model 1-A

SWITCHING LOGIC, Model 1-B, With Dump Tank: Figure 23

1. Assume WIND TURBINE GENERATOR has WINDPOWER to deliver. If TH-1 $\leq$ 68°F, LOAD SWITCH connects BASEBOARD ELECTRIC, stepping through its increments of increasing load resistance as commanded by the PRIMARY CONTROL SIGNAL.
2. If TH-1 > 72°F, and if TH-2 < 190°F, LOAD SWITCH connects WINDPOWER to DUMP TANK IMMERSION HEATERS.
3. Whenever TH-1 > 72°F and TH-2 > 194°F,
   (a) SW-1 is closed, thus sending a BLADE FEATHER and ZERO FIELD command to the WIND TURBINE GENERATOR, or
   (b) SW-2 is closed, starting the circulating pump p-1 in the HEAT WASTER SYSTEM.

   Note: This dual cabability is provided for experimental purposes only. Manual selector switches will determine whether the SW-1 or the SW-2 mode is to be used.
4. The LOGIC in the LOAD SWITCH will monitor TH-1 and TH-2 continually. When TH-2 drops to $\leq$ 190°F, SW-1 and SW-2 will be opened permitting WINDPOWER to again deliver to LOAD SWITCH. LOGIC will maintain the connection between LOAD SWITCH AND DUMP TANK IMMERSION HEATERS until TH-1 $\leq$ 68°F. Whenever TH-1 $\leq$ 68°F LOAD SWITCH will step back to connect WINDPOWER to BASEBOARD ELECTIRC.
5. If at any time TH-A < 65°F, TH-A will activate either L.P. GAS AUX. FURNACE or WOOD BURNING AUX. FURNACE to supply heating to HOUSE. The selection between the auxiliary furnaces will be made by manual switching between the two furnaces. When TH-A rises to above 68°F, furnace will shut down.

6. The WINTER-SUMMER MANUAL SWITCH (SW-W/S) will permit isolation of BASEBOARD ELECTRIC from LOAD SWITCH at those times when heating is not desired in the HOUSE. When SW-W/S is thrown to SUMMER, the signal from TH-1 will be cut-off from LOGIC also.

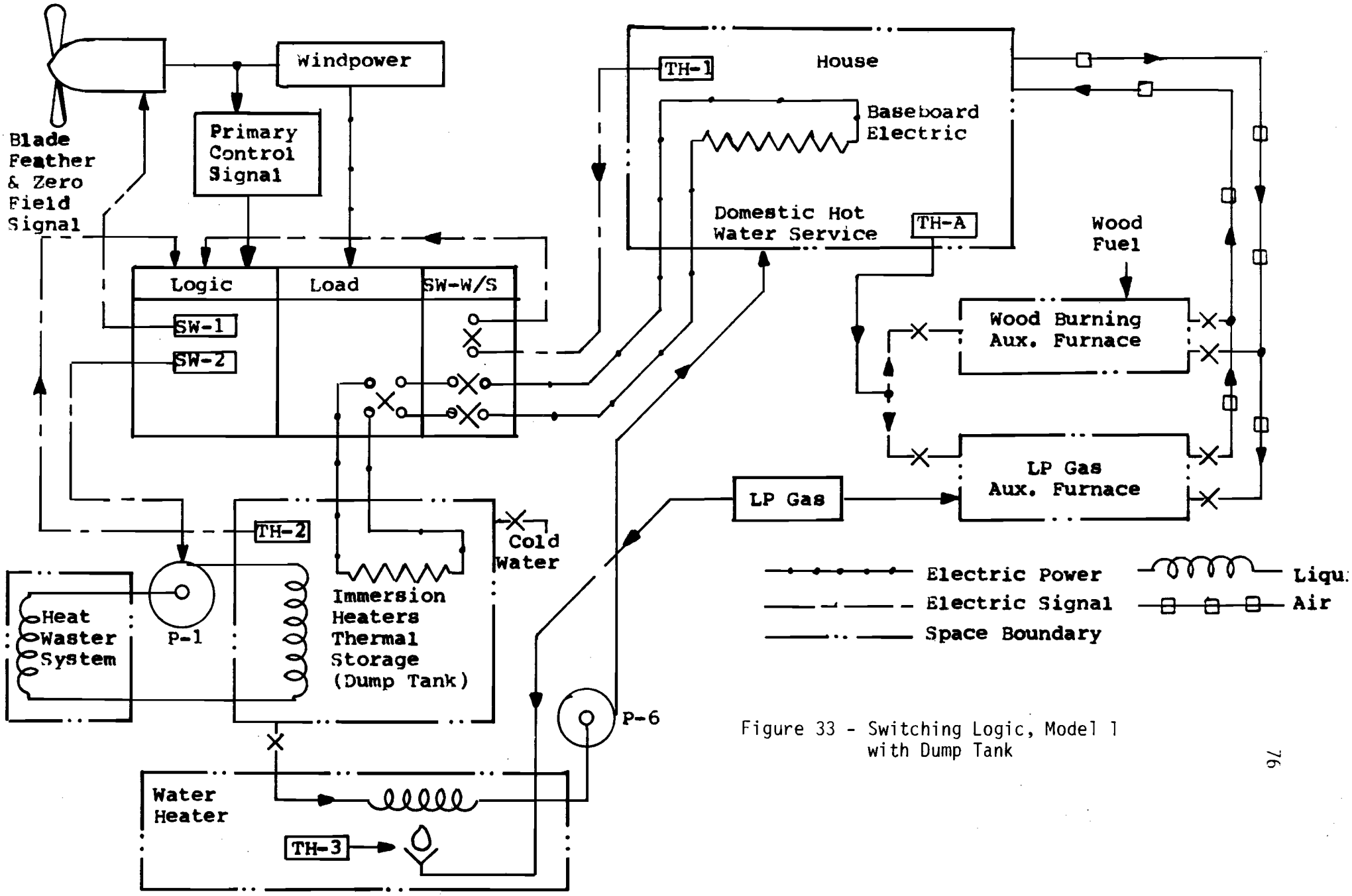

Figure 33 - Switching Logic, Model 1 with Dump Tank

SWITCHING LOGIC FOR WIND FURNACE EXPERIMENT Model 2 - With One Heat Source, Thermal Storage, and Input to Domestic Hot Water: Figure 34

1. Assume WIND TURBINE GENERATOR has WINDPOWER to deliver. If TH-2 < 190°F, LOAD SWITCH connects WINDPOWER to IMMERSION HEATERS, stepping through its increments of increasing load resistance as commanded by the PRIMARY CONTROL SIGNAL. If TH-2 $\geq$ 72°F, and TH-1 < 68°F, LOGIC also closes SW-3, causing pump P-2 to circulate water from THERMAL STORAGE to BASEBOARD CONVECTORS.
2. If TH-2 reaches or exceeds 194°F, LOGIC closes SW-1 commanding the WIND TURBINE GENERATOR to BLADE FEATHER and ZERO FIELD or closes SW-2 activating P-1 in the HEAT WASTER SYSTEM. When TH-2 drops below 190°F, SW-1 or SW-2 is opened.
3. If TH-A < 65°F, TH-A activates either L.P. GAS AUX. FURNACE or WOOD BURNING AUX. FURNACE to send heating to HOUSE. Furnace will shut down whenever TH-A reaches 68°F.
4. The WINTER-SUMMER MANUAL SWITCH (SW-W/S) will not be used in the Model 2 because year-round Domestic Hot Water demand requires that THERMAL STORAGE be kept up to 190°F all year round. There will be a MANUAL OVERRIDE on SW-3 that will prevent circulating hot water into BASEBOARD CONVECTORS during the summer.

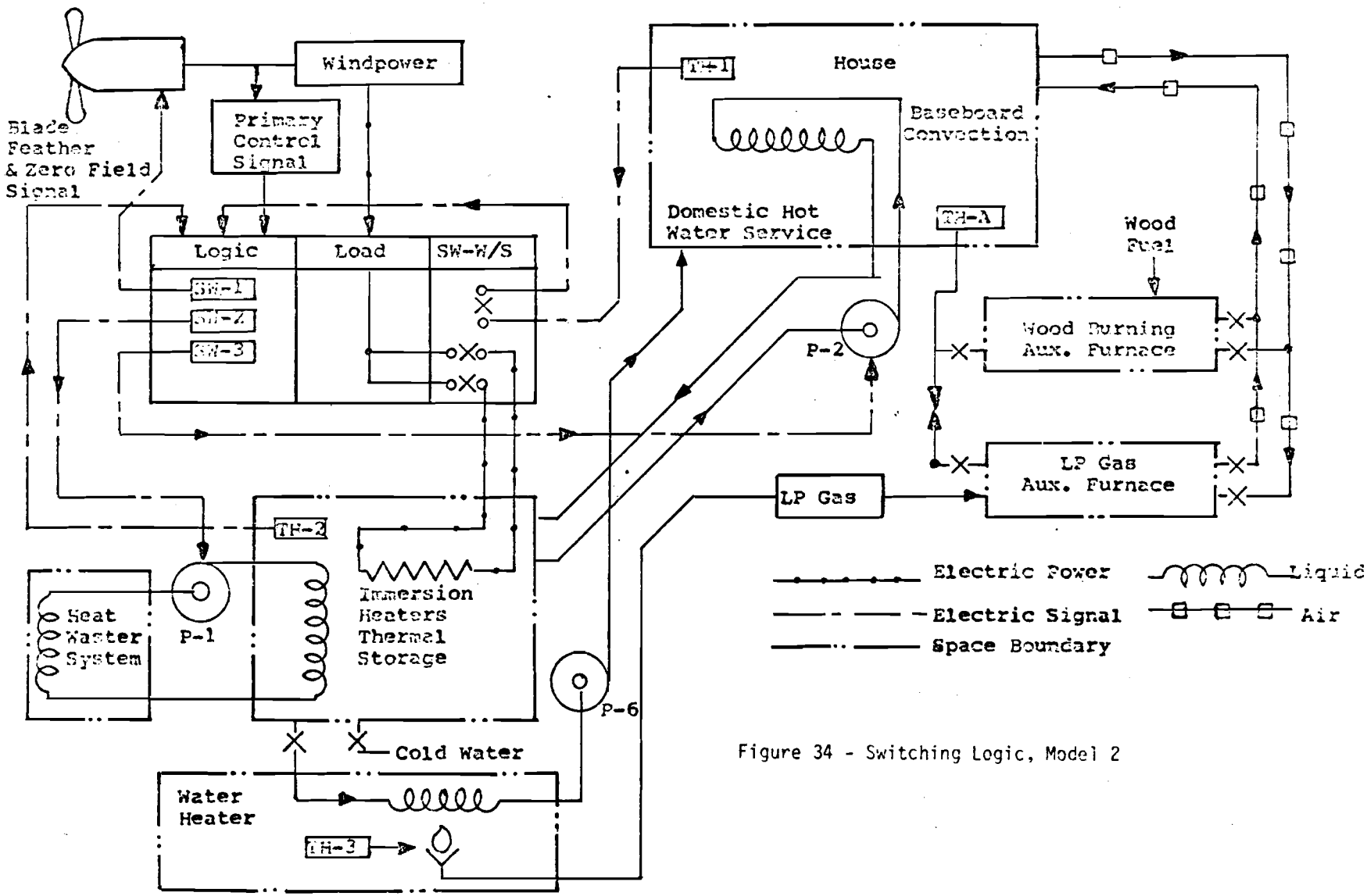

Figure 34 - Switching Logic, Model 2

SWITCHING LOGIC FOR THE WIND FURNACE EXPERIMENT, Model 3-A - With Two Heat Sources, One Thermal Storage and Input to Domestic Hot Water: Figure 35

1. Assume WIND TURBINE GENERATOR has WINDPOWER to deliver. If TH-2 < 190°F, LOAD SWITCH connects WINDPOWER to IMMERSION HEATERS, stepping through its increments of increasing load resistance as commanded by the PRIMARY CONTROL SIGNAL.
2. DT-1 continually monitors the difference between outlet and inlet temperatures of FLAT-PLATE COLLECTOR. When this difference is $\geq$ 20°F, DT-1 activates pump P-4, which has the effect of transferring energy from the collector to THERMAL STORAGE. P-4 will stay on until $(T_{out}-T_{in}) \leq 3°F$, at which time P-4 will shut down.
3. If TH-1 < 68°F and TH-2 $\geq$ 72°F, LOGIC closes SW-3, causing pump P-2 to circulate water from THERMAL STORAGE to BASEBOARD CONVECTORS.
4. If TH-A 65°F, TH-A activates either L.P. GAS AUX. FURNACE or WOOD BURNING AUX. FURNACE to send heating to HOUSE. When TH-A > 68°F, FURNACE will shut down.
5. If TH-2 reaches 194°F, LOGIC closes SW-1 causing the WIND TURBINE GENERATOR to BLADE FEATHER and ZERO FIELD or closes SW-2, activating P-1 in the HEAT WASTER SYSTEM. When TH-2 drops below 190°F, SW-1 and SW-2 are opened.
6. The WINTER-SUMMER SWITCH SW-W/S will not be used in Model 3A due to year-round demand for domestic hot water. A manual override on SW-3 will prevent circulating hot water into BASEBOARD CONVECTORS during the summer.

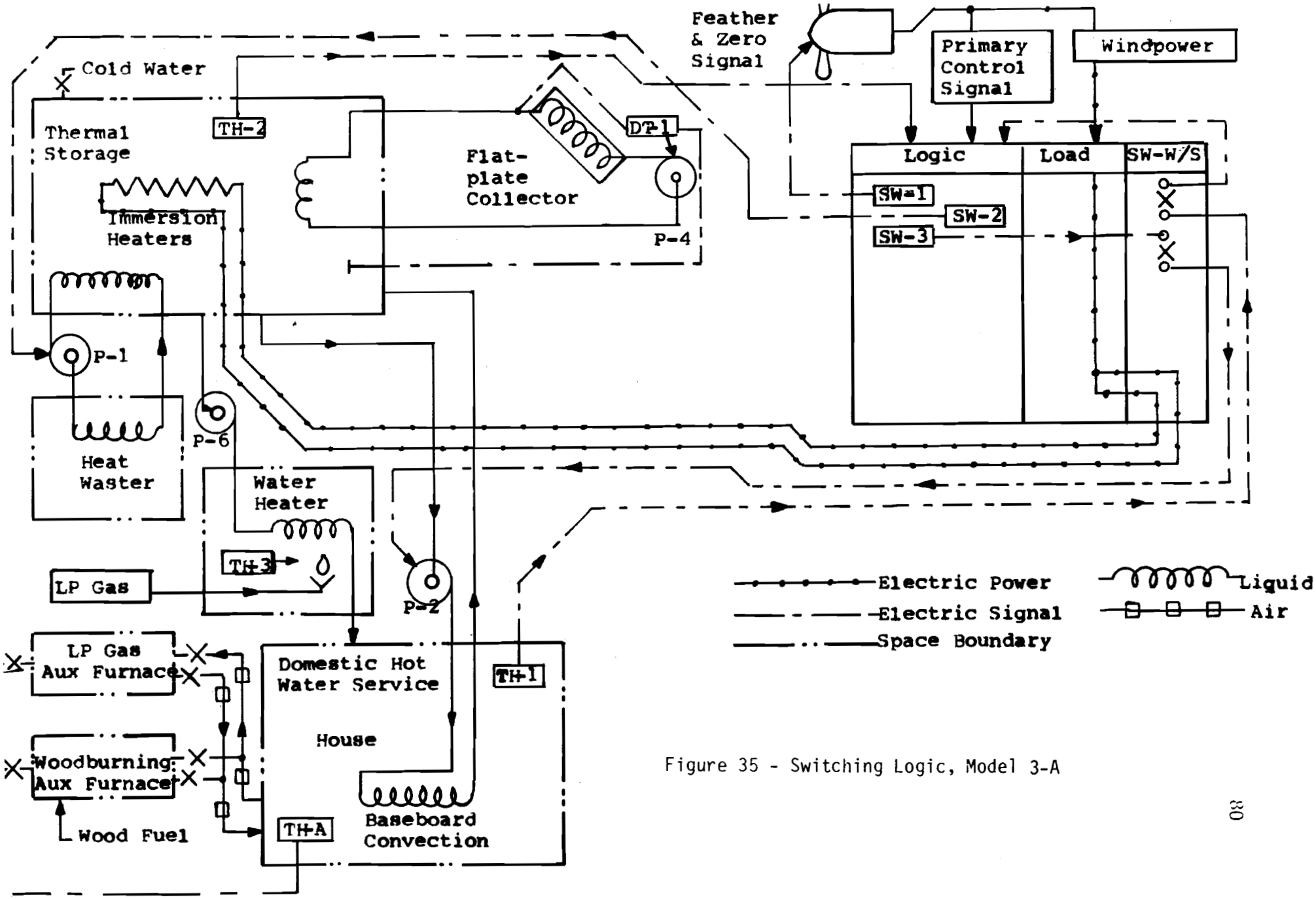

Figure 35 - Switching Logic, Model 3-A

SWITCHING LOGIC FOR THE WIND FURNACE EXPERIMENT, Model 3-B - With Two Thermal Storages and Input to Domestic Hot Water: Figure 36

1. LOGIC has two different sources of heat available to supply heating; (a) water in Thermal Storage 2, whenever TH-2 $\geqq$ 72°F; (b) water in Thermal Storage 1, whenever TH-4 $\geqq$ 72°F. LOGIC will monitor continually TH-1, TH-2, TH-4, WINDPOWER, and DT-1.
2. Assume TH-1 drops below 68°F. LOGIC will first check TH-4 to see if it is $\geqq$ 72°F. If so, LOGIC will cause SW-8 to close valve V-2, will cause SW-9 to open valve V-3, will cause SW-11 to close valve V-4, will cause SW-10 to open valve V-5, and will cause SW-3 to start PUMP P-2. This switching will result in the circulation of water from THERMAL STORAGE 1 into BASEBOARD CONVECTORS. Water will continue to circulate until either TH-1 > 72°F or TH-4 < 72°F.
3. If while circulating water from THERMAL STORAGE 1 into BASEBOARD CONVECTORS, TH-4 drops below 72°F, LOGIC will measure TH-2. If TH-2 $\geqq$ 72°F, LOGIC will then cause SW-8 to open valve V-2, will cause SW-9 to close valve V-5, and will cause SW-3 to continue PUMP P-2 in operation. This switching will result in the circulation of water from THERMAL STORAGE 2 into BASEBOARD CONVECTORS. Water will continue to circulate until either TH-1 > 72°F or TH-2 < 72°F.
4. Differential Thermostat DT-1 will continually monitor the difference between collector inlet and outlet temperatures. Whenever this difference is $\geqq$ 20°F, DT-1 will activate PUMP P-4, which has the effect of taking energy from FLAT PLATE COLLECTOR and putting it

into THERMAL STORAGE 1. When temperature difference is $\cdot$ 3°F, pump will shut off.

5. Whenever LOGIC measures both TH-2 and TH-4 as below 72°F and TH-A < 65°F, TH-A will activate the AUXILIARY FURNACE, causing it to deliver auxiliary heating to HOUSE. Manual switching will have determined whether the L.P. GAS AUX. FURNACE or the WOOD BURNING AUX. FURNACE is to carry the auxiliary load. When TH-A reaches 68°F auxiliary heating will shut down.
6. When TH-2 $\geqq$ TSMAX (200°F) and TH-4 < 180°F, LOGIC will cause SW-5 to open valve V-1, and will cause SW-7 to activate PUMP P-3, thus effectively mixing the contents of THERMAL STORAGE 1 and THERMAL STORAGE 2. LOGIC 2 will keep PUMP P-3 on line until TH-2 has dropped to 190°F or TH-4 reaches TSmax, at which time PUMP P-3 will be taken off the line.
7. Whenever LOGIC measures both TH-2 and TH-4 as > TSmax, LOGIC will cause SW-1 to close, commanding the WIND TURBINE GENERATOR to BLADE FEATHER and ZERO FIELD, will cause SW-2 to close, thus activating PUMP P-1, sending heat out of THERMAL STORAGE 1 into the HEAT WASTER, will cause SW-5 to open valve V-1 and will cause SW-7 to activate PUMP P-3. The net effect of this switching will be the mixing of contents of THERMAL STORAGE 1 and THERMAL STORAGE 2, plus wasting of their heat in excess of 190°F.
8. The WINTER-SUMMER SWITCH, Switch SW-W/S will be operated manually to prevent any pumping of heating water into HOUSE and to prevent any control input from TH-1 into LOGIC during periods when heating is

not wanted. During such periods, both WINDPOWER and FLAT PLATE COLLECTOR will still be available to keep the THERMAL STORAGES heated to supply Domestic Hot Water.

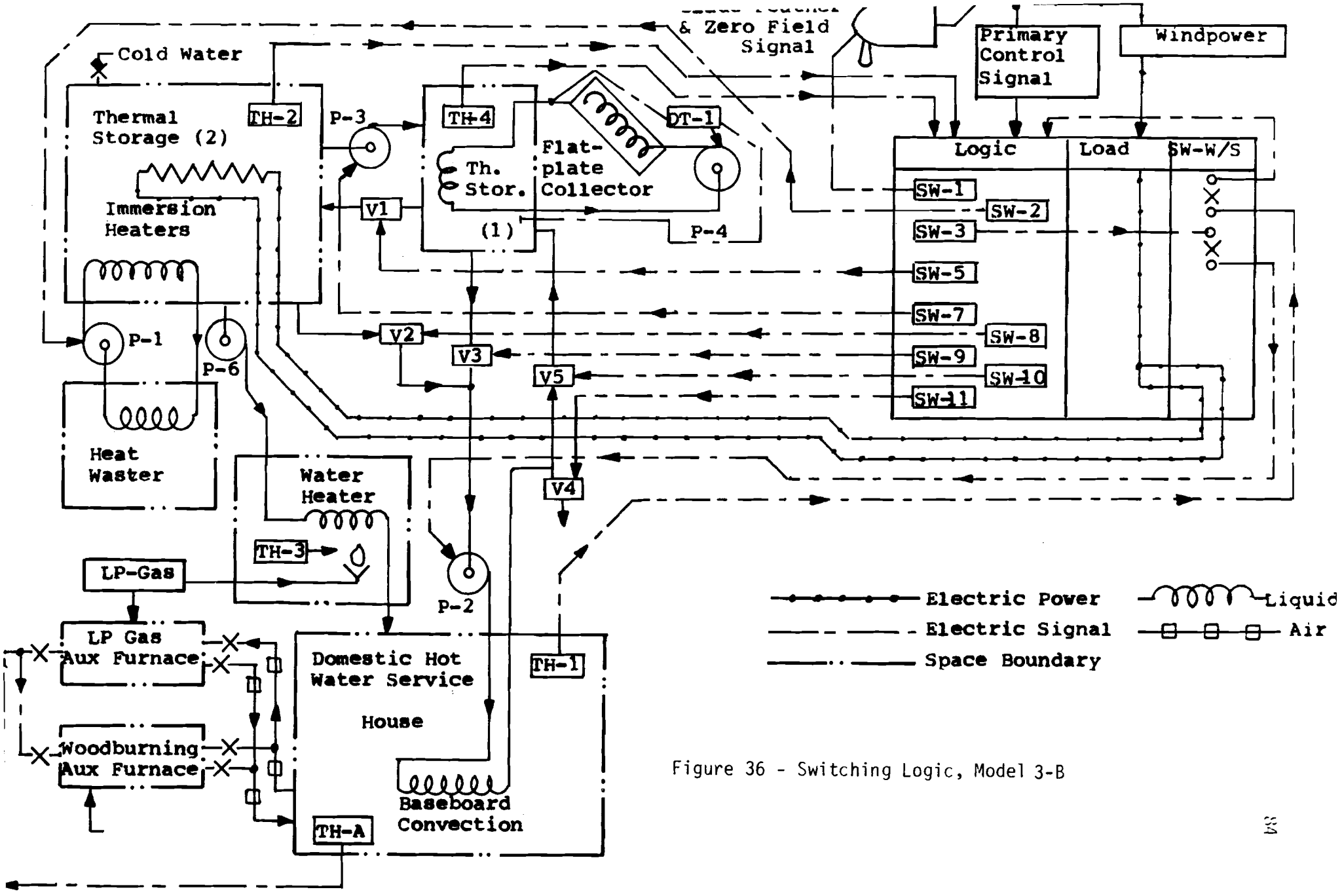

Figure 36 - Switching Logic, Model 3-B

SWITCHING LOGIC FOR THE WIND FURNACE EXPERIMENT, Model 4-A - Wind, Mechanical Churn and Storage: Figure 37

1. Assume that the WIND TURBINE GENERATOR has WINDPOWER available. If TH-2 < 190°F, LOGIC will keep switches SW-1 and SW-5 open and will permit CHURN to add heat to THERMAL STORAGE 1.
2. If TH-1 < 68°F and TH-2 > 72°F, LOGIC will cause SW-3 to close and PUMP P-2 will deliver warm water from THERMAL STORAGE 1 to BASE-BOARD CONVECTORS. When TH-1 reaches 72°F or should TH-2 drop below 72°F, LOGIC will disconnect PUMP P-2.
3. If TH-1 = 68°F and TH-2 > 194°F, LOGIC will cause SW-1 to close commanding WIND TURBINE GENERATOR to BLADE FEATHER and ZERO FIELD, and will also cause SW-5 to close which will operate BRAKE.
4. If TH-2 still rises, LOGIC will cause SW-2 to close, thus activating PUMP P-1 until TH-2 < 190°F.
5. The WINTER-SUMMER SWITCH for this model is a MANUAL OVERRIDE on SW-3 which enables the operator prevent delivery of heating to BASEBOARD CONVECTORS when so desired.

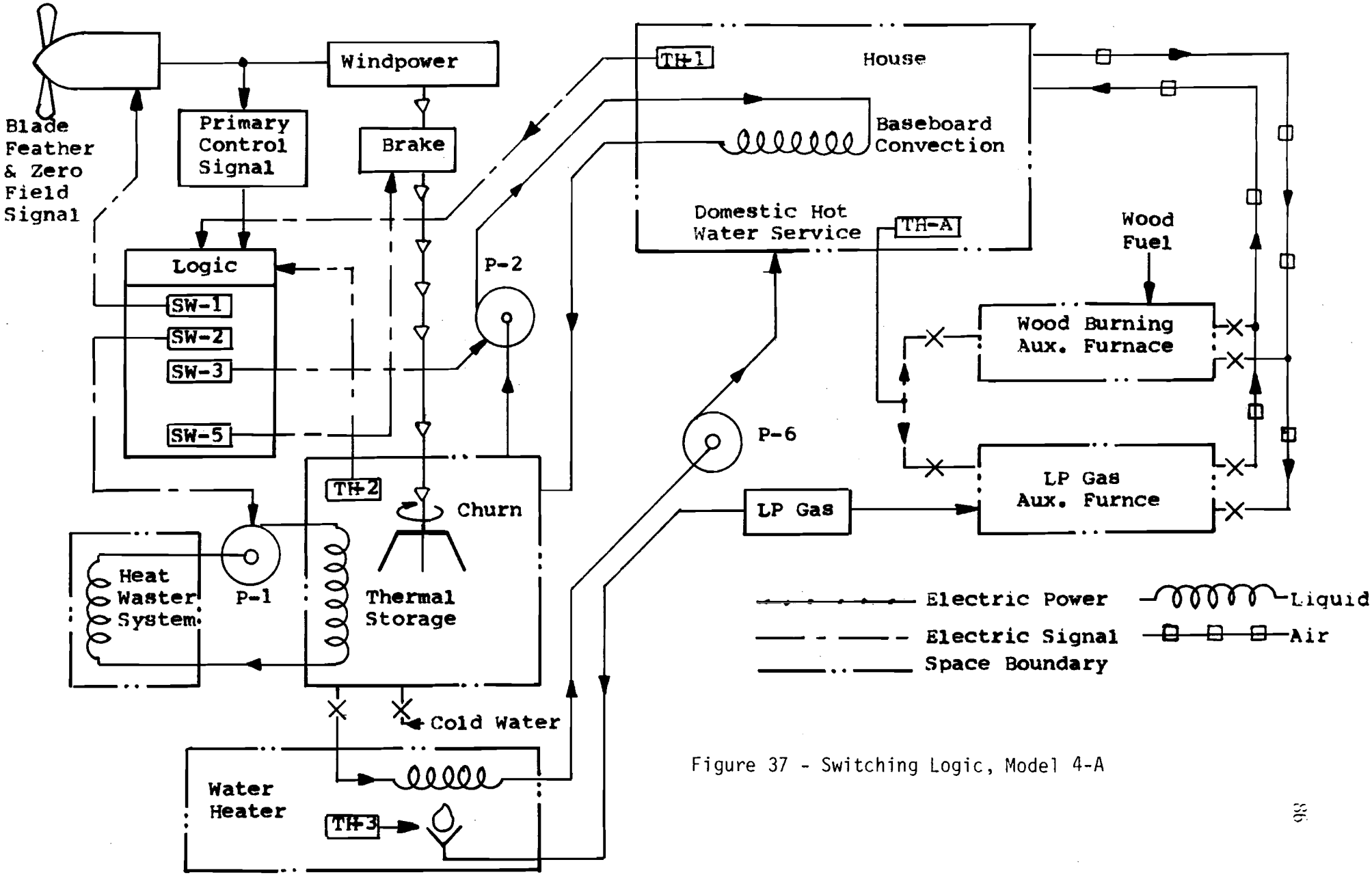

Figure 37 - Switching Logic, Model 4-A

SWITCHING LOGIC FOR THE WIND FURNACE EXPERIMENT, Model 4-B, Wind Mechanical Churn, Flat Plate Collector and Two Storages: Figure 38

1. Assume that the WIND TURBINE GENERATOR has WINDPOWER available. If TH-2 < 190°F, LOGIC will keep switches SW-1 and SW-12 open and will permit churn to add heat to THERMAL STORAGE 2.
2. If TH-1 < 68°F and TH-4 72°F, LOGIC will cause SW-2 to close and PUMP P-2 will deliver warm water from THERMAL STORAGE 1 to BASEBOARD CONVECTORS. When TH-1 reaches 72°F, or should TH-4 drop below 72°F, LOGIC will disconnect PUMP P-2.
3. If TH-1 = 68°F and TH-2 > 190°F and TH-4 < 190°F, LOGIC will cause SW-7 to open valve V-1 and SW-5 to activate PUMP P-3, thus causing the mixing of contents of THERMAL STORAGE 1 and THERMAL STORAGE 2. Once started, this will be continued until either TH-2 has dropped to 190°F or TH-4 has risen to 194°F. If both TH-2 and TH-4 reach 194°F, LOGIC will open SW-5, stopping P-3, and will cause SW-2 to activate PUMP P-1. LOGIC will then allow the HEAT WASTER system to operate until TH-2 has dropped below 190°F.
4. DT-1 will monitor temperature difference across collector. When DT-1 exceeds TH-4, LOGIC will activate PUMP P-4, which will move heat from FLAT PLATE COLLECTOR into THERMAL SOTRAGE 1. When this difference is < 3°F, P-4 will shut down.
5. If at any time TH-A < 65°F and both TH-2 and TH-4 < 72°F, TH-A will activate the AUXILIARY FURNACE. Manual switching will determine whether the L.P. GAS AUX. FURNACE or the WOOD BURNING AUX. FURNACE is to operate. Furnace will operate until TH-A reaches 68°F, at which time it will stop.

6. If TH-1 has not yet reached 72°F and TH-4 drops below 72°F and TH-2 is still above 72°F, LOGIC will cause SW-8 to open valve V-2, will cause SW-9 to close valve V-3, will cause SW-11 to open valve V-4 and will cause SW-10 to close valve V-5. Pump P-2 will then pump until TH-1 = 72°F or TH-2 drops below 72°F. If the latter occurs, LOGIC will open SW-3, SW-8, SW-9, SW-11 and SW-10 and monitor TH-1, TH-2 and TH-4. If TH-1 reaches 65°F before either TH-2 or TH-4 rise above 11°F, then step 5 will be carried out by LOGIC.

SWITCHING LOGIC FOR THE WIND FURNACE EXPERIMENT Model 4-C - Wind Mechanical Churn, Flat Plate Collector and One Storage: Figure 39

1. Assume that the WIND TURBINE GENERATOR has WINDPOWER available. If TH-2 < 190°F, LOGIC will keep switches SW-1 and SW-12 open and will permit CHURN to add heat to THERMAL STORAGE.
2. DT-1 continually monitors temperature difference across FLAT-PLATE COLLECTOR. When this difference is 20°F, DT-1 activates PUMP P-4, which transfers energy from the collector to THERMAL STORAGE. P-4 will stay on until $(T_{out}-T_{in}) \leq 3°F$, at which time P-4 will shut down.
3. If TH-1 $\leq$ 68°F and TH-2 $\geq$ 72°F, LOGIC closes SW-3, causing pump P-2 to circulate water from THERMAL STORAGE to BASEBOARD CONVECTORS?
4. If TH-A < 65°F, TH-A activates either L.P. GAS AUX. FURNACE or WOOD BURNING AUX. FURNACE to send heating to HOUSE. When TH-A > 68°F, FURNACE will shut down.
5. If TH-2 reaches 194°F, LOGIC will:
   (a) Close SW-1 and SW-12, commanding WIND TURBINE GENERATOR to BLADE FEATHER and ZERO FIELD and activating BRAKE or,
   (b) close SW-2, activating PUMP P-1 in the HEAT WASTER SYSTEM.

   When TH-2 drops to 190°F, SW-1, SW-2 and SW-12 will be opened.
6. The WINTER-SUMMER SWITCH for this model is a MANUAL OVERRIDE on SW-3 which cuts out water circulation to BASEBOARD CONVECTORS.

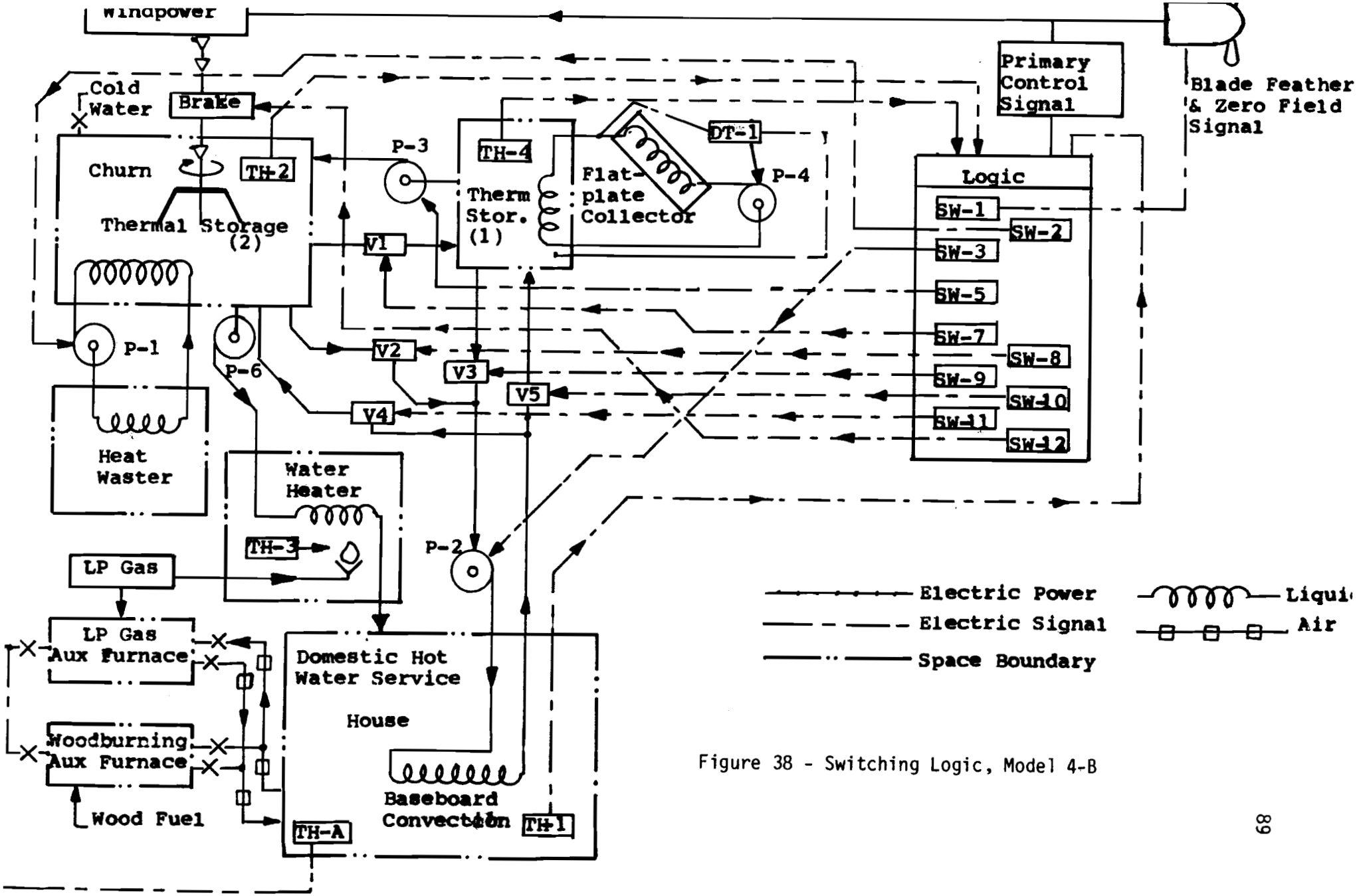

Figure 38 - Switching Logic, Model 4-B

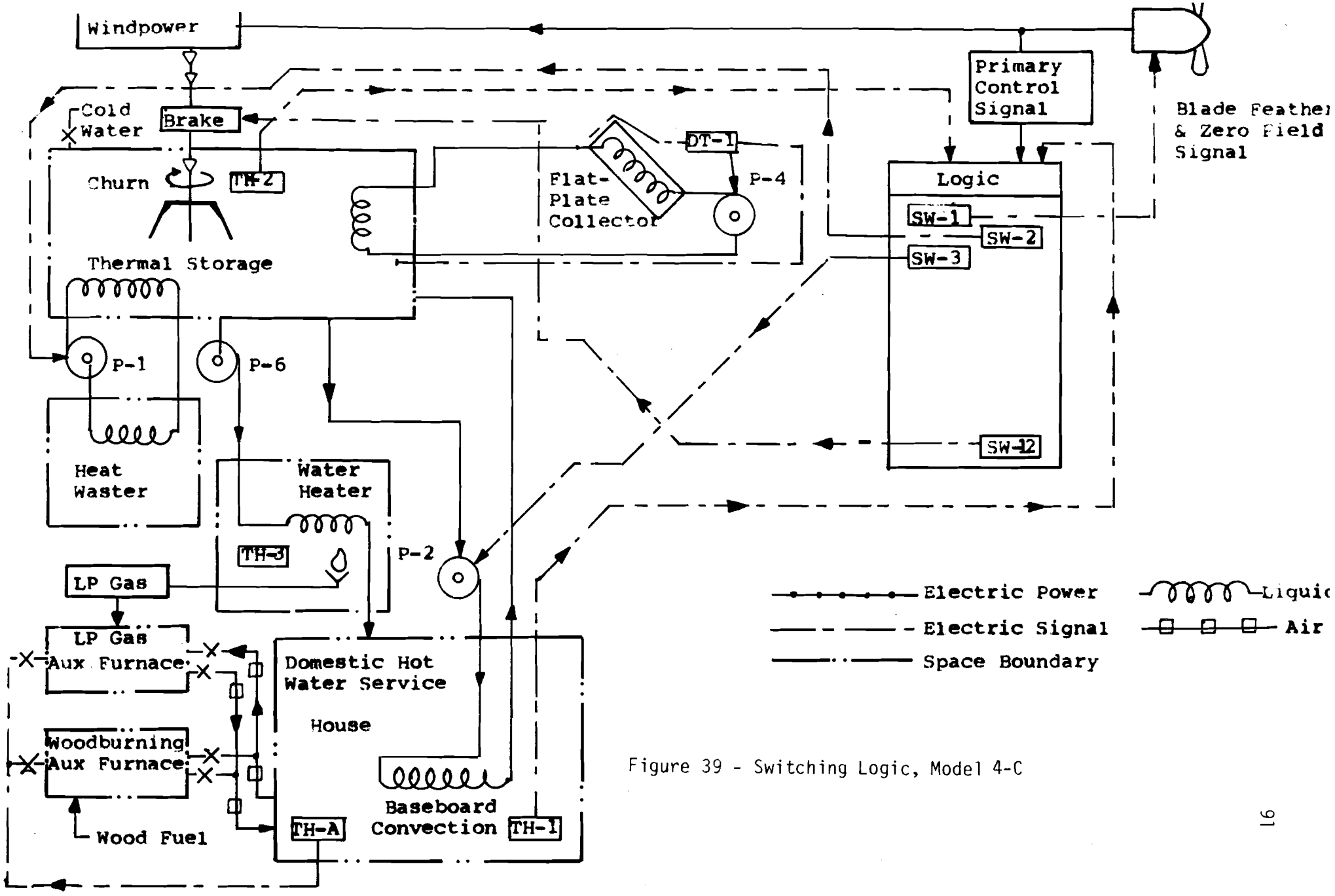

Figure 39 - Switching Logic, Model 4-C

APPENDIX B

Summary of the Bill of Material

This summary lists the cost of each heating system in Solar Habitat One for which the 04 group was wholly or partly responsible.

The normal cost of installation of any of these systems would probably be much less than the figures shown, especially in arrangements using storage. This is because Solar Habitat One, being an engineering laboratory building, has built-in flexibility in most of its heating arrangement and is heavily equipped with instrumentation. A normal solar and windpower heating system, for example, would not require several storage tanks or the capability to vary flowrates over substantial ranges.

In cases where sub-system components are not yet installed or where items were obtained free from the University, an estimate (est.) of the price of materials is given.

Subsystem: Electric Baseboard Convectors

Component	Quantity	Cost ($)
10 foot electric baseboard convectors	9	391.32
Wire	1000 ft (est.)	50.00 (est.)
	Total	441.32

Subsystem: Solar Collector System

Component	Quantity	Cost ($)
Solar collectors (19.6 ft^2 each)	10	1000.00
Solar collector pump	1	74.92
Tank heater pump	1	226.10
Shell-tube heat exchanger	1	164.00
Expansion tank	1	28.95
Water filter	1	295.00
Propylene glycol antifreeze	25 gal	125.00
Gate, globe, purge, and check valves	29	271.68 (est.)
Copper tubing (1 1/4 in nom., 3/4 in nom., 3/4 in O.D.)	618 ft	366.00
Solder tees and elbows (1 1/4 in nom., 3/4 in nom.)	164	110.40
Tubing insulation (3/4 in dia., 1 1/4 in nom.)	458 ft	188.74

Component	Quantity	Cost ($)
Other fitting and adapters	136	176.84
Fasteners and hangers	85	30.00 (est.)
Solder, flux, etc.		34.25
	Total	3,091.88

Subsystem: Electric Immersion Heaters

Component	Quantity	Cost ($)
Heater element (4 kW)	6	45.00
Heater element (1.65 kW)	6	45.00
1 1/4 in galvanized pipe	37 ft.	37.00
1 1/4 in fitting	45	56.87
Gaskets, epoxy, teflon tape		23.00 (est.)
Miscellaneous		32.00 (est.)
	Total	238.87

Subsystem: Water Baseboard Convectors

Component	Quantity	Cost ($)
Water baseboard convectors (double-tiered)	50 ft	160.00
Circulator pumps	3	217.72
Tank mixing pump	1	74.92
Gate, globe, check, and balancing valves	24	185.83

Component	Quantity	Cost ($)
Copper tubing (1 1/4 in nom., 3/4 in nom.)	612 ft	337.14
Solder tees and elbows (1 1/4 in nom., 3/4 in nom.)	88	49.15
Tubing insulation (1 1/4 in nom., 3/4 in nom.)	524 ft.	139.43
Other fittings and adapters	63	66.49
Fasteners and hangers	142	34.65 (est.)
Solder, flux, etc.		43.08 (est.)
	Total	1,308.41

Subsystem: Float Valve Loop

Component	Quantity	Cost ($)
1/4 in Float valves	5	154.00
Globe and gate valves (3/4 in)	5	33.50 (est.)
Copper tubing (3/4 in nom.)	82 ft	34.03
Solder tees and elbows (3/4 in nom.)	7	3.00
Other fittings and adapters	16	7.04
Fasteners and hangers	13	9.01
Solder, flux, etc.		3.00 (est.)
	Total	243.58

Subsystem: Hot Water Preheat Loop

Component	Quantity		Cost ($)
Heater coil	1		50-75.00 (est.)
Valves (3/4 in)	2		13.40 (est.)
Tubing (3/4 in nom.)	120 ft.		49.80 (est.)
Tees and elbows	12		18.12 (est.)
Tubing insulation (3/4 in nom.)	30 ft.		7.25 (est.)
		Total	138.57-163.57

Instrumentation

Component	Quantity	Source	Cost ($)
Data acquisition system	1		9000.00
Differential thermostat	1		90.00
LP-Gas meter	2		94.00
Rotameter	10		1000.00 (est.)
Pressure gauges and thermometers	8		320.00 (est.)
		otal	10,504.00