University of Massachusetts Amherst

Flow Injection Reagent Introduction by Supported Liquid and Nafion Membranes: Determination of Phosphate

Item Type	article;article
Authors	Chalk, Stuart J;Tyson, Julian
Rights	UMass Amherst Open Access Policy
Download date	2024-07-23 15:35:53
Link to Item	https://hdl.handle.net/20.500.14394/6608

FLOW INJECTION REAGENT INTRODUCTION BY SUPPORTED LIQUID AND NAFION MEMBRANES: DETERMINATION OF PHOSPHATE

STUART J. CHALK and JULIAN F. TYSON*
Department of Chemistry, University of Massachusetts, Amherst, MA 01003-0035, U.S.A.

(*Received* 16 *May* 1994. *Revised* 16 *June* 1994. *Accepted* 16 *June* 1994)

Summary—The use of membrane tubing for the introduction of reagents for the determination of phosphate in waters by flow injection analysis was studied. The use of membranes eliminates the need for confluence points in the design of flow injection manifolds. This increases the sensitivity of the manifold by providing a sufficient reagent excess for the reaction without diluting the sample. Methods for the introduction of acid, molybdate and hydrazine were devised for the determination of phosphate by the Molybdenum Blue method. Several membranes were examined and Nafion and Accurel (microporous polypropylene) were found to be most useful. Molybdate introduction was achieved using a supported liquid membrane (SLM). Calibration was linear and a detection limit of 12 ppb phosphate (4 ppb phosphorus) was obtained.

Flow injection analysis (FIA) is now well established as an automated method for common colorimetric determinations. The enclosed environment of a flow injection (FI) manifold allows reagent addition in a more reproducible and less time consuming manner. However, the necessity to add reagents inherently decreases the possible sensitivity of the manifold because of the dilution that occurs at the confluence point(s).

In a previous paper[1] it has been shown that each type of manifold configuration, single, double (multi) and reverse single line, has the same sensitivity when optimized. One of the results of this investigation showed that the optimal procedure for introduction of a reagent is to use the most concentrated solution of reagent possible. This provides the reagent excess necessary for the reaction yet minimizes the dispersion (or confluence point dilution) thus increasing sensitivity. Extrapolation of this finding indicates that reagent introduction without dilution (RIWD) should provide the best sensitivity. In this paper we approach the idea of RIWD by using membranes to deliver reagents.

Polymeric membranes have been used widely in FI for the separation of gas/liquid streams[2–4] and permeation of gases analytes between liquid streams.[5–8] They have also been used extensively to modify electrodes for better selectivity/specificity.[9–13] Nafion cation exchange tubing has also been used in a method for the preconcentration of lead in sea-water.[14]

The FIA literature also contains examples of reagent introduction using membranes. Nieman and co-workers used Nylon 66 and Celgard 5511 to introduce glucose oxidase as a reagent for enzyme catalyzed determinations of sucrose and glucose, respectively.[15,16] Porous PTFE has been used by Dasgupta *et al.*[17] to introduce 4(-2-pyridylazo) resorcinol (PAR) in the determination of copper. However, in these papers the reagent was introduced by forcing a small bulk liquid flow (μl/min) through the membrane. Although this causes minimal dilution the procedure is similar to the use of a confluence point for reagent addition. True reagent introduction without dilution has been implemented in FI. Hwang and Dasgupta have used Nafion tubing for the pH control of FI streams by the introduction of ammonium ion from an ammonium hydroxide donor.[18,19] Bruckenstein and Trojanek used a silicon rubber membrane for the introduction of bromine gas in the indirect determination of phenols.[20] In a different, but equivalent, manner reagent introduction using polymers has also

*Author to whom correspondence should be addressed.

been achieved using reagents encapsulated in polymer beads.[21,22]

In this paper the introduction of the three reagents needed for the determination of phosphate by the Heteropoly Blue method[23] is accomplished using membrane reactors. Of the numerous reducing agents employed for the reduction of the phosphomolybdate species,[23–27] hydrazine was used due to the formation of the most intense Heteromolybdenum Blue product ($\epsilon = 26800$ l. mol.$^{-1}$ cm^{-1} at 830 nm)[28] and its applicability to introduction using membranes. The use of a hydrazine permeation tube was investigated for the introduction of the reducing agent. Acid and hydrazine were introduced using Nafion cation exchange tubing and molybdate was introduced using a porous polypropylene membrane (Accurel) as the basis of a supported liquid membrane (SLM). A SLM consists of an organic extractant, commonly in an organic solvent, in a microporous membrane.[29–31] This arrangement allows extraction of a species from an aqueous donor phase, transport across the membrane, and re-extraction into an aqueous acceptor phase as shown in Fig. 1. This process may involve charged species (Fig. 1a) in which case electrical neutrality is maintained by transport of an ion in the reverse direction, or neutral molecules (Fig. 1b) where solvation drives the process. Previously, SLMs have been used in FI for extraction[32–34] but not for the purpose of introducing reagents.

EXPERIMENTAL

Reagents

All chemicals were obtained from Fisher (Fisher, Pittsburgh, PA, U.S.A.), except tri-n-butyl phosphate (Kodak, Rochester, NY), and

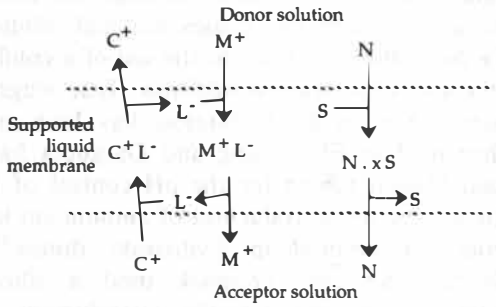

Fig. 1. Transport of extracted species through a supported liquid membrane. M is the ionic species extracted, C is the counter extracted ion, N is a neutral extracted species, L is the extractant and S is a solvent.

were of analytical reagent grade. Doubly distilled 18 Mohm Epure water (Barnstead, Dubuque, IA) was used throughout.

Instrumentation

Ultraviolet and visible spectrophotometric measurements were made using a Lambda VI spectrophotometer (Perkin Elmer, Norwalk, CT) which was interfaced to an IBM PS/2 (IBM, Armonk, NY). Atomic absorption measurements of molybdenum were made using a Perkin Elmer 1100B spectrometer.

Manifolds

Flow injection manifolds were constructed using 0.8 mm i.d. Teflon tubing throughout (Upchurch, Oak Harbor, WA, U.S.A.). Fittings were obtained from a variety of sources (Upchurch; Omnifit, New York, NY, U.S.A.; FIA solutions, Houston, TX, U.S.A.). Membrane reactors were made from PermaPure drier tubes (PermaPure, Toms River, NJ, U.S.A.) with suitable modification.

A six port Teflon Rheodyne valve (Supelco, Bellefonte, PA, U.S.A.) was used to make injections. A custom made Omnifit glass column was obtained to house the hydrazine permeation tube. Pump tubing was purchased from Cole Parmer (Cole Parmer, Chicago, IL, U.S.A.). Pharmed tubing (Upchurch) was used to pump the organic solvents. Ismatec MS Reglo pumps (Ismatec SA, Switzerland) were used throughout.

Membranes

Nafion cation exchange tubing (H^+ form, 1.3, 0.8 and 0.3 mm i.d., 0.1 mm wall thickness) and anion exchange tubing (NO_3^- 0.8 mm i.d., 1 mm o.d.) were obtained from PermaPure. Accurel microporous polypropylene (1.8 mm i.d., 2.4 mm o.d.) was supplied by Akzo (Akzo Chemical, Arnhem, The Netherlands). Silastic grade silicone tubing (0.76 mm i.d., 1.5 mm o.d.) was obtained from Dow (Dow Chemical, Midland, MI, U.S.A.). A high emission (20 cm × 1 cm o.d.) hydrazine permeation tube was supplied by VICI (VICI Metronics, Santa Clara, CA, U.S.A.).

Procedures

The organic phases for the SLMs were forced into the membrane by blocking off one inlet of the donor and acceptor streams and pumping the solvent in the donor side for 15 min.

Flow rates were measured by timing the effluent into a 10 ml volumetric flask. Membrane reactor flow rate integrity (estimation of any bulk flow through the membrane) was tested by weighing the acceptor/donor before and after pumping for a measured period of time. The weights were corrected for density changes and compared. In all cases when the membrane reactors were used the flow rates in and out were found to be equal within experimental error.

Membrane reactors were constructed as required by modification of PermaPure drier tubes. Many problems were encountered in engineering water tight seals. Figure 2 shows the final connections for production of both reactors. In evaluation of the different types of devices it was found that flowing the donor stream in the opposite direction to the acceptor produce significantly high concentrations of the reagent in question. Therefore, this configuration was used throughout.

For the introduction of acid Nafion cation exchange tubing was used throughout.

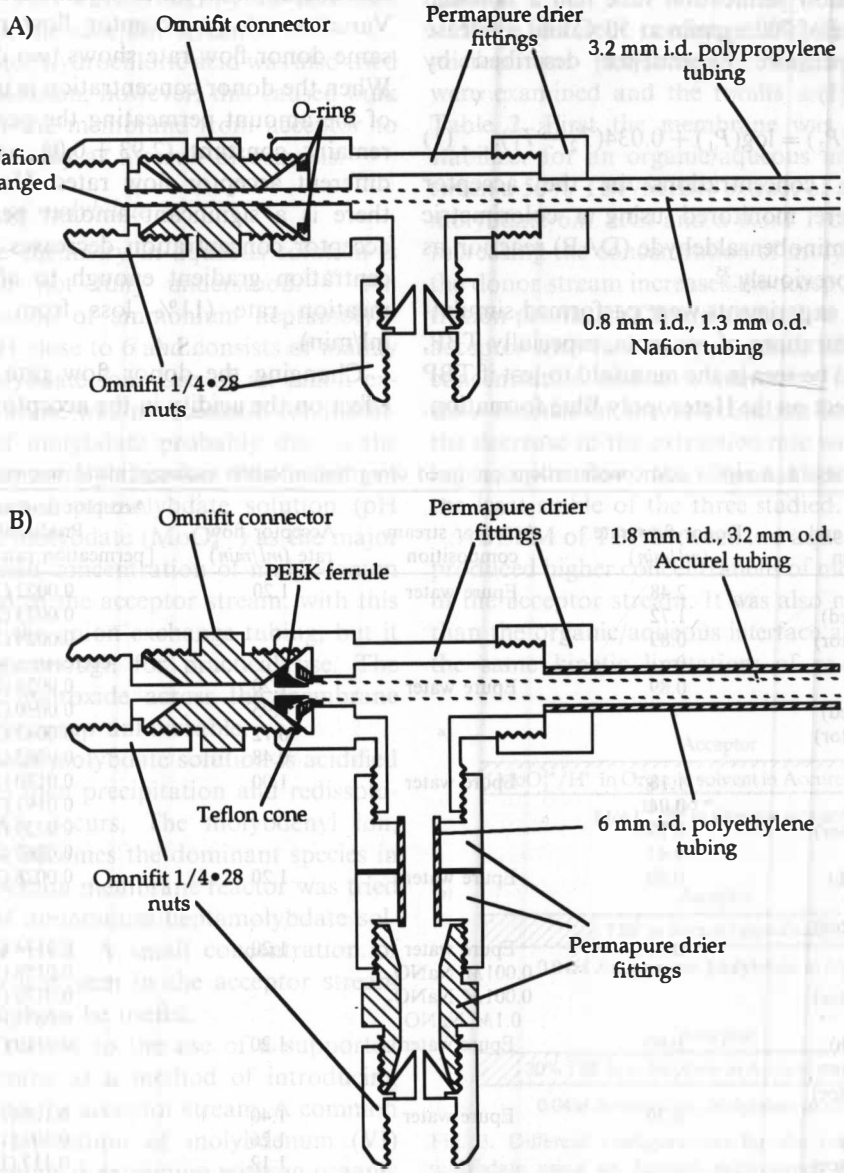

Fig. 2. Tubing connections for Nafion and Accurel membrane reactors. (A) A PermaPure Nafion membrane drier was modified to allow use of liquids as both the acceptor and donor. The Nafion tubing expands when wet and forms a tight seal against the Omnifit connector. (B) PermaPure drier fittings were used to produce an Accurel reactor. The Accurel tubing was crimped between a cone and a ferrule to provide a water tight seal when the fitting was tightened down.

For the molybdate introduction an anion exchange membrane reactor was tried for the introduction of heptamolybdate ion ($Mo_7O_{24}^{6-}$) into the acceptor. Then a Nafion reactor was tried for the introduction of molybdenyl ion (MoO_2^{2+}) into the acceptor. Finally, both a silicone membrane and a microporous polypropylene membrane (Accurel) were looked at as suppports for SLMs for molybdenyl introduction.

For the introduction of hydrazine both a microporous PTFE permeation tube and a Nafion reactor were investigated. The 20 cm high emission permeation tube had a nominal release rate of 700 ng/min at 50°C and a release rate temperature dependence described by equation (1)

$$\log(P_2) = \log(P_1) + 0.034(T_2 - T_1). \quad (1)$$

Hydrazine concentrations in the acceptor stream were monitored using a colorimetric dimethylaminobenzaldehyde (DAB) reaction as reported previously.[35]

Off-line experiments were performed simulating concentrations of reagents, especially TBP, that would be seen in the manifold to test if TBP had an effect on the Heteropoly Blue formation. Different mixtures of reagents were added to 100 ml calibrated flasks made up to volume and heated in a water bath at 100°C for 10 min. They were then cooled using cold tap water and analyzer using a 1 cm path length cuvette.

RESULTS AND DISCUSSION

Introduction of acid

Nafion cation exchange membrane tubing (15 and 40 cm) was evaluated for acid introduction (Table 1). As was expected increasing the donor acid concentration increased the acceptor acid concentration all other parameters being equal. Variation of the acceptor flow rate with the same donor flow rate shows two distinct cases. When the donor concentration is in large excess of the amount permeating the permeation rate remains constant (2.93 ± 0.08 μmol/min) for different acceptor flow rates. However, when there is a significant amount permeating the acceptor concentration decreases the H^+ concentration gradient enough to affect the permeation rate (11% loss from 1.4 to 0.70 ml/min).

Changing the donor flow rate had a small effect on the acidity in the acceptor stream, and

Table 1. Acceptor acid concentrations produced using Nafion cation exchange membrane reactors

Donor acid and concentration	Donor flow rate (*ml/min*)	Acceptor stream composition	Acceptor flow rate (*ml/min*)	Acceptor acid concentration Produced (*M*) [permeation rate (μ*mol/min*)]
1*M* HCl(a)	2.48	Epure water	1.20	0.0022 (2.64)
(KCl buffered)	1.72			0.0023 (2.76)
(15 cm reactor)	0.89			0.0024 (2.88)
	0			decreasing with time
1*M* HCl(a)	0.89	Epure water	1.20	0.0024 (2.88)
(KCl buffered)			0.95	0.0030 (2.85)
(15 cm reactor)			0.72	0.0042 (3.02)
			0.48	0.0062 (2.98)
5*M* HCl(a)	1.18	Epure water	1.00	0.0170 (17.0)
(unbuffered)	0.94			0.0191 (19.1)
(15 cm reactor)	0.70			0.0229 (22.9)
	0.47			0.0263 (26.3)
9*M* H_2SO_4(b)	0.90	Epure water	1.20	0.0028 (3.36)
(unbuffered)				
(15 cm reactor)				
5*M* HCl(b)	0.90	Epure water	1.20	0.0174 (20.9)
(unbuffered)		0.001*M* $NaNO_3$		0.0158 (19.0)
(15 cm reactor)		0.001*M* $NaNO_3$		0.0170 (20.4)
		0.1*M* $NaNO_3$		0.0851 (102)
5*M* HNO_3(b)	0.90	Epure water	1.20	0.0110 (13.2)
(unbuffered)				
(15 cm reactor)				
5*M* HCl(c)	0.30	Epure water	1.40	0.100 (140)
(unbuffered)			1.26	0.107 (135)
(40 cm reactor)			1.12	0.117 (131)
			0.98	0.132 (129)
			0.84	0.151 (127)
			0.70	0.178 (125)

Acceptor stream acid concentrations measured by (a) 2,4-dinitrophenol indicator color change, (b) methyl violet indicator color change, (c) flow-through pH electrode.

indicates that the kinetics of the donor/ membrane equilibrium are slow compared to the release of protons into the acceptor stream. Increasing the ionic strength of the acceptor stream increased the acidity of the acceptor stream for the same donor stream only when the ionic strength of the acceptor was high enough for substantial ion exchange. However, even with water as the acceptor the acceptor stream acidity increased. This, and the difference that the type of acid had on the acidity resultant in the acceptor indicates that a Donnan breakdown process allows HCl to pass through the membrane.[36] This was verified by the detection of chloride in the acceptor stream.

Concentrated hydrochloric acid was also tried as a donor solution; however, this caused bulk flow through the membrane from acceptor to donor, presumably as a result of osmosis.

Introduction of molybdate

Molybdate chemistry in aqueous solution is complex and not fully understood.[37–39] An aqueous solution of ammonium heptamolybdate has a pH close to 6 and consists of mainly the heptamolybdate ion. Use of an anion exchange membrane was unsuccessful for the introduction of molybdate probably due to the size of the heptamolybdate ion. Basification of an ammonium heptamolybdate solution (pH 10) produces molybdate (MoO_4^{2-}) as the major species. A small concentration of molybdenum was produced in the acceptor stream, with this solution and the anion exchange tubing, but it was not high enough for practical use. The transport of hydroxide across the membrane also made this setup unfavorable.

If an aqueous molybdate solution is acidified (below pH 2) then precipitation and redissolution of MoO_3 occurs. The molybdenyl ion, MoO_2^{2+}, now becomes the dominant species in solution. A Nafion membrane reactor was tried with a 0.01*M* ammonium heptamolybdate solution of 6*M* HCl. A small concentration of molybdenum was seen in the acceptor stream but not enough to be useful.

Attention turned to the use of a supported liquid membrane as a method of introducing molybdate into the acceptor stream. A common method for separation of molybdenum (VI) from other metals is extraction with an organic amine or oxygenate.[40–45] Of the extractants investigated tri-n-butyl phosphate (TBP) has the highest extraction efficiency.[46,47] The distribution ratio a 6*M* HCl solution of molybdate (molybdenyl) and TBP is 316[46] in favor of the organic phase. As the aqueous phase acidity decreases the extraction into TBP is much less favored due to the lower concentration of molybdenyl which is extracted as [MoO_2^{2+} . $2Cl^-$] into TBP.

A silastic grade silicone membrane with a mixture of TBP and methyl isobutyl ketone (another good molybdenyl extractant) in the membrane was found to swell to almost double its size. However, transport of molybdenyl using this arrangement was slow, and did not produce a high enough acceptor stream concentration.

Three different configurations (Fig. 3) of a microporous polypropylene supported SLM were examined and the results are detailed in Table 2. First the membrane was used as a stabilizer for an organic/aqueous interface between a 50% TBP/MIBK extract of ammonium molybdate/6*M* HCl and a 0.3*M* HCl acceptor. Increasing the concentration of molybdenum in the donor stream increases the acceptor concentration produced. Changing the flow rate of the acceptor also has an appropriate effect on the concentration and it is interesting to note the slow kinetics of the re-extraction indicated by the decrease in the extraction rate with increasing acceptor flow rate. This configuration was the least stable of the three studied.

An SLM of TBP between two aqueous phases produced higher concentrations of molybdenum in the acceptor stream. It was also more stable than the organic/aqueous interface and showed the same kinetic limitations of re-extraction.

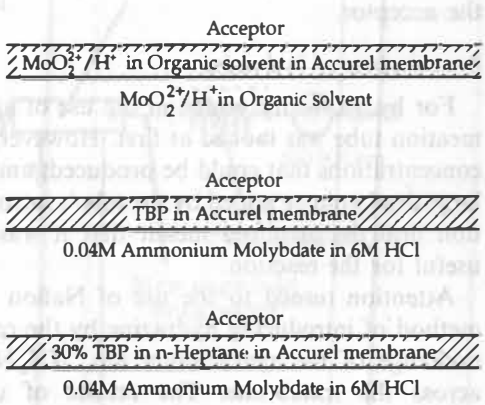

Fig. 3. Different configurations for the introduction of molybdate using an Accurel microporous polypropylene membrane. (a) Aqueous/organic interface stabilized by the membrane [organic solvents were TBP, MIBK and 50% (v/v) TBP/MIBK]. (b) Aqueous/TBP/aqueous supported liquid membrane. (c) Aqueous/30% TBP in n-heptane (v/v)/aqueous supported liquid membrane.

Table 2. Acceptor molybdate concentrations using 40 cm Accurel membrane reactor

Liquid in membrane	Donor stream Composition	Donor stream Flow rate (*ml/min*)	Acceptor stream Composition	Acceptor stream Flow rate (*ml/min*)	Molybdenum* concentration (pmm) [extraction rate (*μg/min*)]
Molybdate/ acid/organic donor	50% (v/v) TBP/MIBK extract of 0.01*M* ammonium molybdate in 6*M* HCl	0	0.3*M* HCl	0.65	350 (228)
				1.27	175 (222)
	50% (v/v) TBP/MIBK extract of 0.02*M* ammonium molybdate in 6*M* HCl	0	0.3*M* HCl	0.65	750 (488)
				1.27	350 (445)
	50% (v/v) TBP/MIBK extract of 0.04*M* ammonium molybdate in 6*M* HCl	0	0.3*M* HCl	0.67	1100 (737)
				0.81	930 (753)
				0.94	740 (696)
				1.07	620 (663)
				1.20	520 (624)
				1.34	420 (563)
TBP	0.04*M* ammonium molybdate in 6*M* HCl	0.15	0.3*M* HCl	0.55	2000 (1100)
				0.77	1300 (1001)
				0.99	1050 (1040)
				1.10	900 (990)
30% TBP in n-heptane	0.04*M* ammonium molybdate in 6*M* HCl	0.15	0.3*M* HCl	0.55	5000 (2750)
				0.77	4000 (3080)
				0.99	3200 (3168)
				1.10	2500 (2750)

*Measured by atomic absorption spectrometry.
Numbers are approximate due to the concentrations measured.

The most stable SLM, and the configuration that produced the highest molybdenum concentrations, was the one where 30% TBP in n-heptane was used in the Accurel membrane. Here, unlike the previous two configurations, the extraction rate stays relatively constant with variation of the acceptor flow rate indicating faster extraction kinetics. Decreasing the TBP concentration in the heptane caused a less stable reactor. Increasing the TBP concentration caused lower concentrations to be produced in the acceptor.

Introduction of hydrazine

For hydrazine introduction the use of a permeation tube was looked at first. However, the concentrations that could be produced, and the large dead volume added by the tube's introduction into the manifold meant that it was not useful for the reaction.

Attention turned to the use of Nafion as a method of introducing hydrazine by the cation exchange of the hydrazinium ion, $NH_2NH_3^+$, across the membrane. The results of using different concentrations of hydrazinium sulfate ($N_2H_6SO_4$) in aqueous/acid solutions as a donor are shown in Table 3.

Unlike the acid introduction using Nafion, the introduction of hydrazinium ion proceeds solely by an ion exchange process. When the acceptor solution ionic strength is very low hydrazinium ion does not permeate through the membrane because of a lack of cations on the acceptor side. Changing the concentration of added acid in the donor stream does the affect the hydrazine transport across the membrane. Changing the flow rate of the acceptor produces different concentrations of hydrazine as expected. Also it shows that at low flow rates the permeation rate is decreased severely due to the much smaller concentration gradient between the acceptor and donor streams, whereas at high flow rates this is not the case and the permeation rate is essentially constant (43.0 ± 2.6 μg/min).

Determination of phosphate by the production of molybdophosphate

Initial experiments linking the Nafion acid membrane reactor and the molybdate SLM reactor in series produced interesting results. Injection of standards up to 1 ppm phosphate with each of the above systems produced linear calibrations ($R = 0.997$–0.999) when measured at 350 nm. This was due to the formation of cloudy solutions which had broad absorptions over all of the visible region with equivalent molar absorptivities of 50,000 l. mol.$^{-1}$ cm^{-1} at 350 nm. The product is very different from the normal molybdophosphate expected which has a molar absorptivity of ~800 l. mol.$^{-1}$ cm^{-1} at

Table 3. Hydrazine acceptor concentrations using a 40 cm Nafion cation exchange membrane reactor

Donor stream			Acceptor stream		
Hydrazine concentration (*ppm*)	Acid (HCl) concentration (*M*)	Flow rate (*ml/min*)	Composition	Flow rate (*ml/min*)	Hydrazine concentration produced (*ppm*) [permeation rate (*μg/min*)]
50	0.01	0.58	Epure water	0.47	0 (0)
			0.0001*M* HCl		0.01 (0.0047)
			0.001*M* HCl		2.12 (1.00)
			0.01*M* HCl		28.8 (13.5)
			0.1*M* HCl		37.7 (17.7)
	0.001	0.58	0.1*M* HCl	0.47	35.7 (16.8)
	0.0001				35.9 (16.9)
	Epure water				35.6 (16.7)
100	Epure water	0.58	0.1*M* HCl	0.47	53.6 (25.2)
200					112.0 (52.6)
300					169.0 (79.4)
50	Epure water	0.58	0.1*M* HCl	0.47	35.6 (16.7)
				1.1	26 (28.6)
				2.2	20 (44.0)
				3.3	14 (46.2)
				4.4	10 (44.0)
				5.5	7.5 (41.3)
				6.6	6.0 (39.6)

380 nm. Comparing the sensitivities of the calibrations obtained it seems likely that the product is a molybdophosphate-TBP adduct as the sensitivity decreased with decreasing availability of TBP (interface > TBP > TBP/heptane).

Following the encouraging calibration results, water samples were analyzed and compared with those of an EPA colormetric method (365.2) for phosphate. The EPA results were 10 times less than the results obtained from the SLM system indicating that this method is not specific to phosphate.

Determination of phosphate by the Heteropoly Blue reaction

It was important to find out if TBP had an effect on this reaction and it was not found to interfere below the 0.02% (v/v) level. However, a shift in the absorption maximum was observed (to 818 nm) when compared with previous results.[23]

The final manifold that was used for this determination is shown in Fig. 4. As can be seen complete reagent introduction without dilution

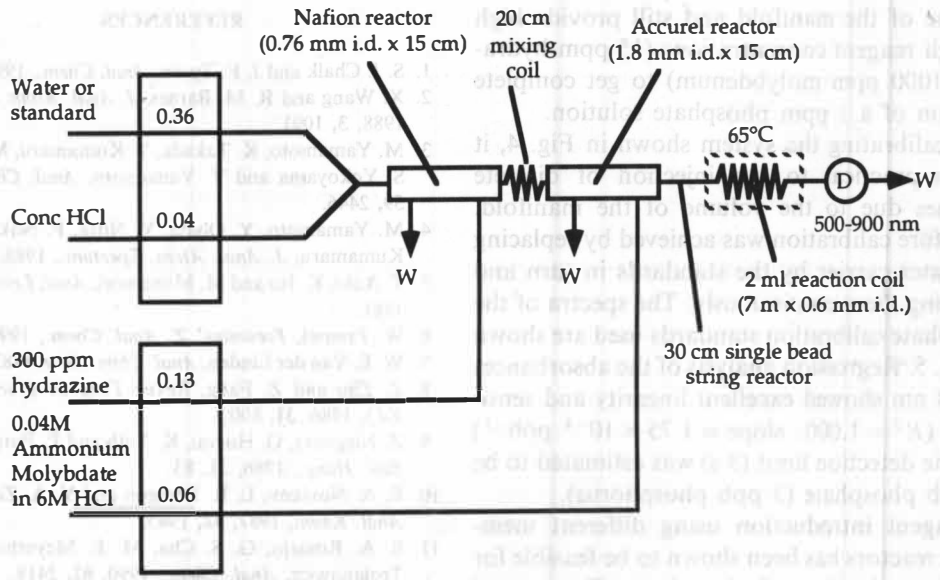

Fig. 4. Final manifold configuration for the determination of phosphate using reagent introduction without dilution of molybdate and hydrazine. Numbers above the flow lines represent flow rates in ml/min. A silicone oil bath was used as the heater. W is waste.

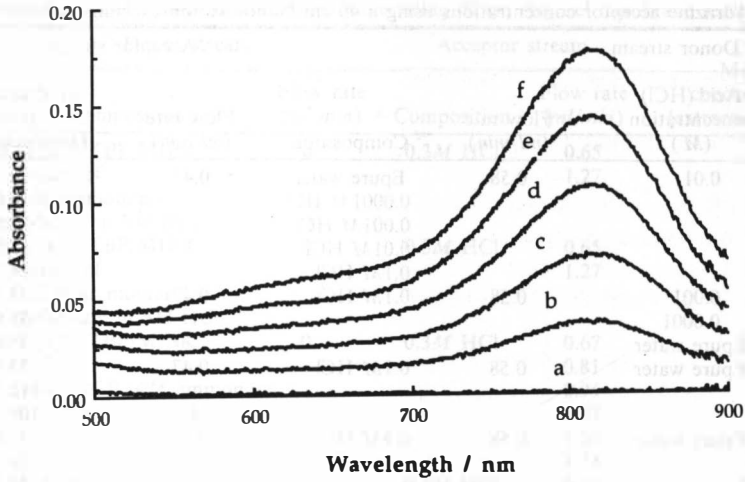

Fig. 5. Calibration standard spectra produced using the manifold in Fig. 4. Standard concentrations are (a) 0, (b) 200, (c) 400, (d) 600, (e) 800 and (f) 1000 ppb phosphate.

was not achieved. With hydrazine as reductant, a very low pH (0) is required in order to prevent the reduction of molybdate directly by hydrazine. Using the Nafion membrane reactor it was impossible to produce such a concentration of acid in the acceptor stream. Therefore to minimize dilution and add the required acid concentration HCl was merged 1:10 with the carrier stream. Using hydrazine as a reductant also necessitates the use of a lengthy period of heating. A 7 m coil was immersed in 65°C silicone oil bath to provide the heat energy required.

Membrane reactors for hydrazine and molybdate introduction were made up to minimize the volume of the manifold and still provide high enough reagent concentrations (15 ppm hydrazine, 1000 ppm molybdenum) to get complete reaction of a 1 ppm phosphate solution.

In calibrating the system shown in Fig. 4, it was impractical to use injection of discrete volumes due to the volume of the manifold. Therefore calibration was achieved by replacing the water carrier by the standards in turn and pumping them continuously. The spectra of the phosphate calibration standards used are shown in Fig. 5. Regression analysis of the absorbances at 818 nm showed excellent linearity and sensitivity ($R^2 = 1.000$, slope $= 1.75 \times 10^{-4}$ ppb^{-1}) and the detection limit (3 s) was estimated to be 12 ppb phosphate (3 ppb phosphorus).

Reagent introduction using different membrane reactors has been shown to be feasible for the determination of phosphate. The use of SLM technology has proved very useful for the introduction of molybdate as the molybdenyl ion. Good linearity and sensitivity was achieved. However, restrictions due to using hydrazine to perform the reduction of molybdophosphate make the final manifold design impractical for routine use in anything but a process environment. Research is continuing into the use of other reducing agents using reagent introduction without dilution methodology.

Acknowledgements—The authors wish to thank Pfizer Inc., Groton, CT for their financial support and also PermaPure for the donation of the Nafion and anion exchange tubin, Akzo for the donation of the Accurel tubing and VICI Metronics for the donation of the hydrazine permeation tube.

REFERENCES

1. S. J. Chalk and J. F. Tyson, *Anal. Chem.*, 1994, **66**, 660.
2. X. Wang and R. M. Barnes, *J. Anal. Atom. Spectrom.*, 1988, **3**, 1091.
3. M. Yamamoto, K. Takada, T. Kumamaru, M. Yasuda, S. Yokoyama and Y. Yamamoto, *Anal. Chem.*, 1987, **59**, 2446.
4. M. Yamamoto, Y. Obata, Y. Nitta, F. Nakata and T. Kumamaru, *J. Anal. Atom. Spectom.*, 1988, **3**, 441.
5. T. Aoki, K. Ito and M. Munemori, *Anal. Lett.*, 1988, **21**, 1881.
6. W. Frenzel, *Fresenius' Z. Anal. Chem.*, 1990, **336**, 21.
7. W. E. Van der Linden, *Anal. Chim. Acta*, 1983, **151**, 359.
8. Z. Zhu and Z. Fang, *Kexue Tongbao (Foreign Lang. Ed.)*, 1986, **31**, 800.
9. Z. Niegreisz, G. Horvai, K. Toth and E. Pungor, *Symp. Biol. Hung.*, 1986, **31**, 83.
10. E. A. Novikov, L. K. Shpigun and Y. A. Zolotov, *Zh. Anal. Khim.*, 1987, **42**, 1945.
11. S. A. Rosario, G. S. Cha, M. E. Meyerhoff and M. Trojanowicz, *Anal. Chem.*, 1990, **62**, 2418.
12. C. F. Mandenius, *Anal. Chim. Acta*, 1988, **215**, 71.
13. M. E. Meyerhoff and Y. M. Fraticelli, *Anal. Lett.*, 1981, **14**, 415.

14. J. A. Koropchak and L. Allen, *Anal. Chem.*, 1989, **61,** 1410.
15. C. A. Koerner and T. A. Nieman, *Anal. Chem.*, 1986, **58,** 116.
16. D. Pilosof and T. A. Nieman, *Anal. Chem.*, 1982, **54,** 1698.
17. P. K. Dasgupta, R. S. Vithanage and K. Petersen, *Anal. Chim. Acta*, 1988, **215,** 277.
18. H. Hwang and P. K. Dasgupta, *Anal. Chem.*, 1986, **58,** 1521.
19. H. Hwang and P. K. Dasgupta, *Anal. Chem.*, 1987, **59,** 1356.
20. A. Trojanek and S. Bruckenstein, *Anal. Chem.*, 1986, **58,** 983.
21. L. L. Zamora, J. V. G. Mateo and J. M. Calatayud, *Anal. Chim. Acta*, 1992, **265,** 81.
22. K. Ueno, F. Sagara, K. Higashi, K. Yakata, I. Yoshida and D. Ishii, *Anal. Chim. Acta*, 1992, **261,** 241.
23. D. F. Boltz and M. G. Mellon, *Anal. Chem.*, 1947, **19,** 873.
24. J. Ruzicka and J. W. B. Stewart, *Anal. Chim. Acta*, 1975, **79,** 79.
25. J. W. B. Stewart and J. Ruzicka, *Anal. Chim. Acta*, 1976, **82,** 137.
26. K. S. Johnson and R. L. Petty, *Anal. Chem.*, 1982, **54,** 1185.
27. S. Motomizu, T. Wakimo and K. Toei, *Talanta*, 1983, **30,** 333.
28. W. J. Williams, *Handbook of Anion Determinations*, p. 471. Butterworths, London, 1979.
29. R. A. Bartsch, W. A. Charewicz, S. I. Kang and W. Walkowiak, in *Liquid Membranes: Theory and Applications*, p. 86. ACS, Washington DC, 1987.
30. A. C. Muscantello, J. D. Navratil and M. Y. Price, in *Liquid Membranes: Theory and Applications*, p. 182. ACS, Washington DC, 1987.
31. R. Nobel and P. R. Davies, in *Liquid Membranes: Theory and Applications*, p. 56. ACS, Washington DC, 1987.
32. G. Audunsson, *Anal. Chem.*, 1986, **58,** 2714.
33. D. E. Barnes and J. F. Van Staden, *Anal. Chim. Acta*, 1992, **261,** 441.
34. D. E. Barnes, M. J. C. Taylor, G. D. Marshall and J. F. Van Staden, *Anal. Chim. Acta*, 1993, **274,** 283.
35. W. D. Basson and J. F. Van Staden, *Analyst*, 1978, **103,** 998.
36. P. K. Dasgupta, R. Quin Bligh, J. Lee and V. D'Agostino, *Anal. Chem.*, 1985, **57,** 253.
37. H. M. Neumann and N. C. Cook, *J. Am. Chem. Soc.*, 1957, **79,** 3026.
38. E. Pungor and A. Halasz, *J. Inorg. Chem.*, 1970, **32,** 1187.
39. D. T. Richens and A. G. Sykes, *Commun. Inorg. Chem.*, 1981, **1,** 141.
40. A. K. De and S. Rahaman, *Anal. Chem.*, 1964, **36,** 685.
41. K. Kimura, *Bull. Chem. Soc. Jpn*, 1960, **33,** 1038.
42. M. B. MacInnis, T. K. Kim and J. M. Laferty, in *First International Conference on the Chemistry and Uses of Molybdenum*, p. 56. CLIMAX, London, 1973.
43. J. P. McKaveney and H. Freiser, *Anal. Chem.*, 1957, **29,** 290.
44. A. S. Vieux, N. Rutagengwa and V. Noki, *Inorg. Chem.*, 1976, **15,** 722.
45. A. S. Vieux, N. Rutagengwa and L. Basosila, *J. Inorg. Nucl. Chem.*, 1977, **39,** 645.
46. T. Ishimori, K. Watanabe and N. Nakamura, *Bull. Chem. Soc. Jpn*, 1960, **33,** 637.
47. I. Nelidow and R. M. Diamond, J. Phys. Chem., 1955, **59,** 710.